TC-D5

AEP Model
Canadian Model

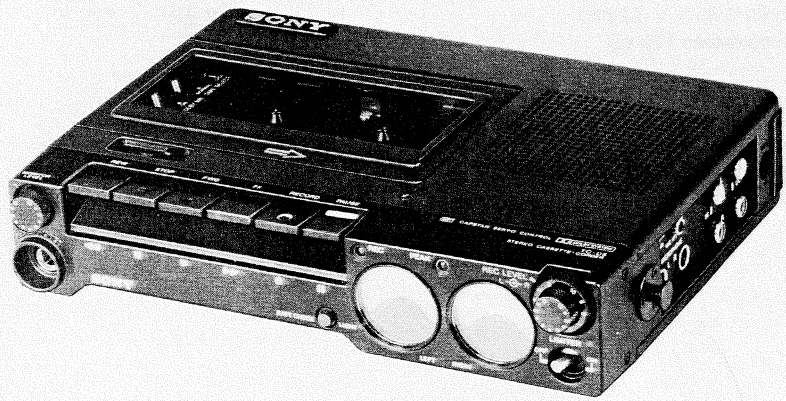

STEREO CASSETTE-CORDER

SPECIFICATIONS

Power Requirements: 3 V dc, two batteries IEC designation R20 (size D)
External Power Input Jack
required voltage: 6 V dc
usable from 100, 117, 120 V ac with optional AC Power Adaptor AC-12, from 110, 120, 127, 220, 240 V ac with optional AC-122, or from 12 V car battery with optional Sony Car Battery Cord DCC-127A or DCC-130

Battery Life: Approx. 2 hours of continuous recording with Sony Super Batteries SUM-1S or 5.5 hours with Eveready Alkaline Batteries No. E95

Dimensions: Approx. 237 (w) x 48 (h) x 168 (d) mm
9 3/8 (w) x 1 7/8 (h) x 6 5/8 (d) inches

Weight: Approx. 1.7 kg, 3 lb 12 oz
including batteries

Track: 4-track 2-channel stereo

Fast Winding Time: Approx. 150 sec. with Sony Cassette C-60

Frequency Response: DOLBY NR OFF with MICROPHONE inputs

- with Ferri-chrome Cassette
  (TAPE SELECT : Fe-Cr)
  20 – 18,000 Hz (NAB)
  30 – 16,000 Hz ±3 dB (NAB)
  30 – 16,000 Hz (DIN)
- With Chromium Dioxide Cassette
  20 – 16,000 Hz (NAB)
  30 – 15,000 Hz ±3 dB (NAB)
  30 – 15,000 Hz (DIN)
- With standard cassette
  (TAPE SELECT : NORMAL)
  20 – 15,000 Hz (NAB)
  30 – 12,000 Hz (DIN)

Wow and Flutter: 0.06 % (WRMS)
±0.17 % (DIN)

S/N Ratio: DOLBY NR OFF

- With Ferri-chrome Cassette
  (TAPE SELECT : Fe-Cr)
  59 dB at peak level (NAB)
  57 dB (DIN, 1975 rev.)
- With Chromium Dioxide Cassette
  55 dB at peak level (NAB)
- With standard cassette
  (TAPE SELECT : NORMAL)
  53 dB at peak level (NAB)

DOLBY NR ON
Improved by 5 dB at 1 kHz, 10 dB above 5 kHz

Total Harmonic Distortion: 1.3 %

Record Bias Frequency: 85 kHz

— Continued on page 2 —

SONY
SERVICE MANUAL

Speaker: Approx. 5 cm (2 inches) dia.

Power Output: 200 mW (at 10 % harmonic distortion)
at dc operation

Inputs: Two MICROPHONE input jacks (phone jack)
sensitivity 0.2 mV (–72 dB)
for low impedance microphone
Two LINE IN jacks (phono jack)
sensitivity 0.06 V (–22 dB)
input impedance 100 kΩ

Outputs: Two LINE OUT jacks (phono jack)
load impedance 10 kΩ or higher
rated output 0.435 V (–5 dB) at load
impedance 100 kΩ
HEADPHONES jack (stereo binaural jack)
for 8–32 Ω impedance headphones

0 dB = 0.775 V

SECTION 1
OUTLINE

1-1. BLOCK DIAGRAM

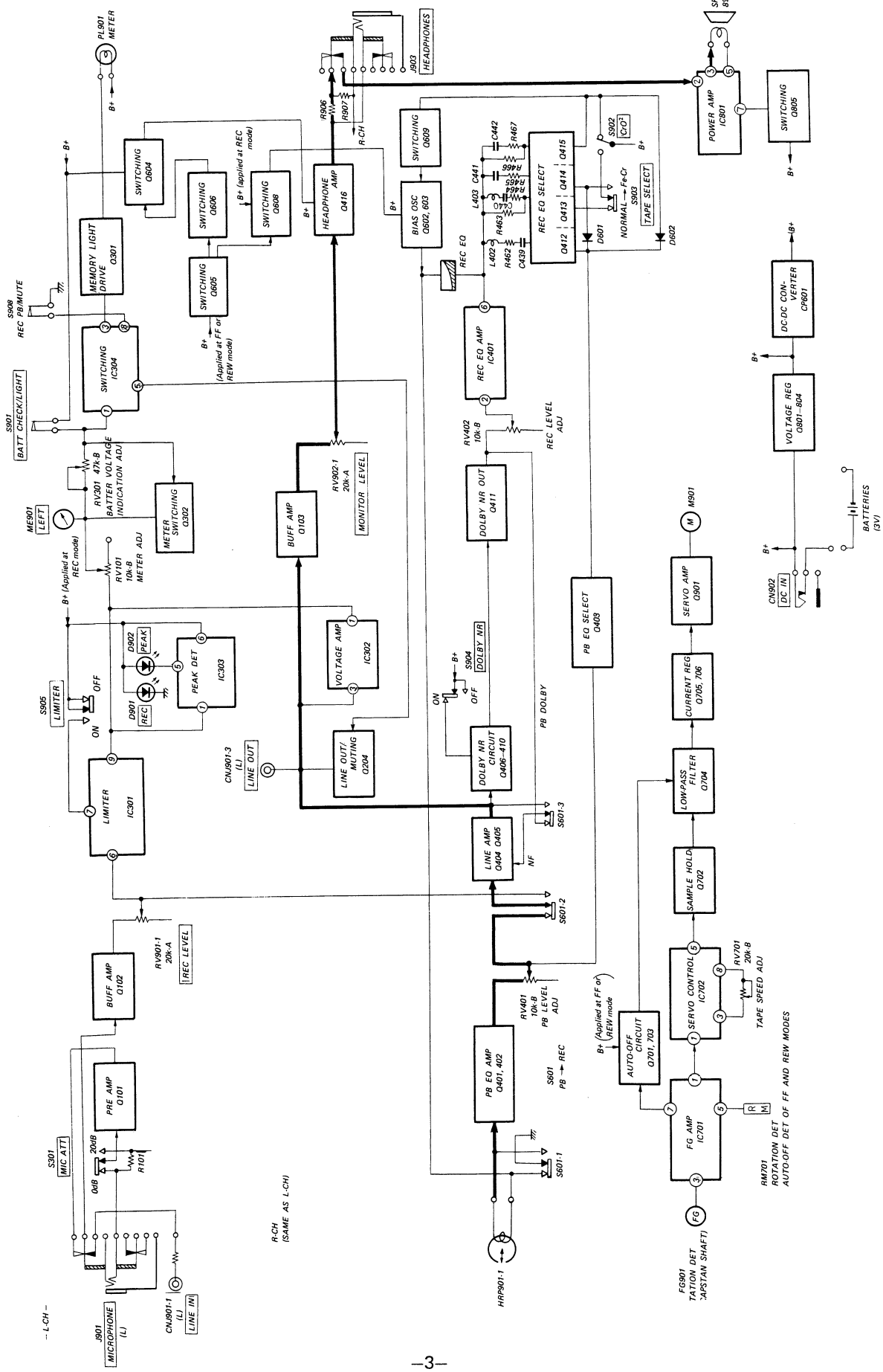

1-2. MECHANICAL OPERATION

- **Disc Drive System**

An elastic rubber coating is applied to the flywheel and the motor pulley is pressed directly against this rubber coating to drive the flywheel.
The compliance of this elastic materials and the inertial mass of the flywheel together function as a mechanical filter, to eliminate any flutter components above approximately 100Hz.
Motor torque increases in inverse proportion to the reduction ratio between the motor and the flywheel.
Meanwhile, since the inertial mass of the flywheel itself is low, excellent start-up characteristics (The time from start-up to rated speed is less than 0.2 sec) and anti-rolling effect are obtained.

- **Capstan Servo Control Mechanism**

The speed is detected through the flywheel which is directly coupled to the capstan, to apply the servo control.
As shown in Fig. 1-1, the bearing assembly comprises a bias magnet, coil, and stator.
The flywheel has a rotor and the coil senses fluctuations in magnetic flux caused by variations in the air gap between the rotor and the stator, to generate the servo control frequencies.
This serves to remove any wow components from 10Hz down to the vicinity of DC, to improve the anti-rolling effect.

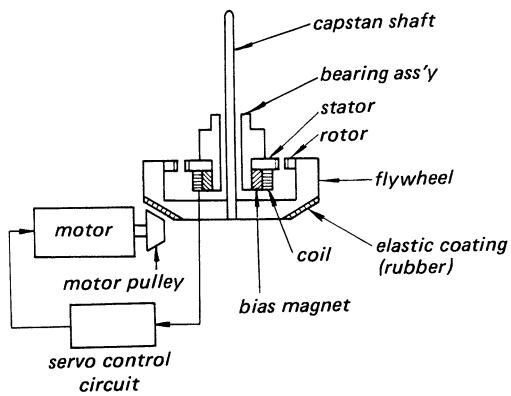

Fig. 1-1

SECTION 2
DISASSEMBLY

- Follow the disassembly procedure in the numerical order given.

Top Panel Ass'y Removal

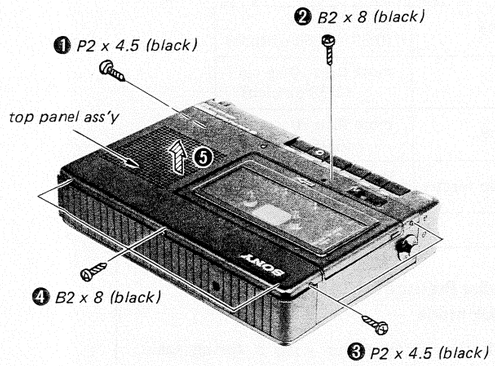

Record Amp Board Removal

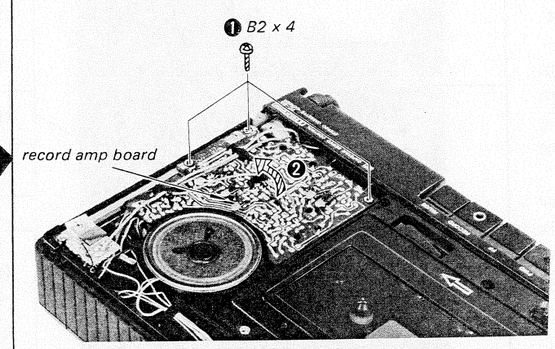

4P Phono Jack Removal

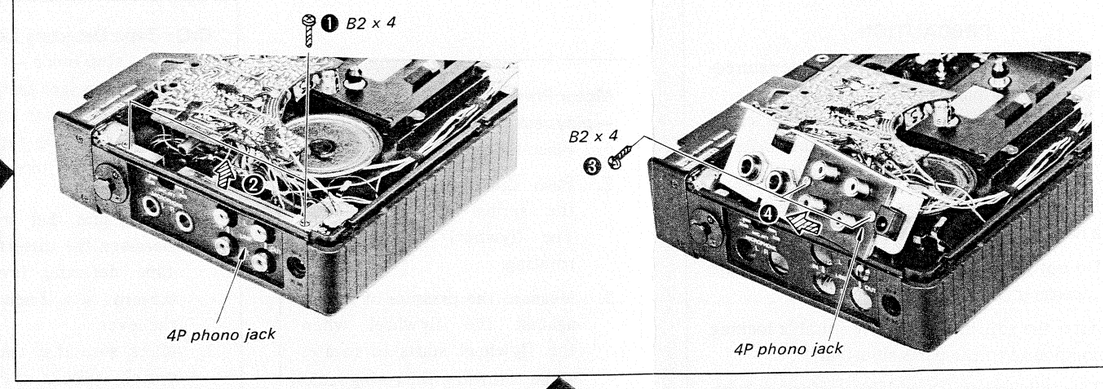

Front Panel Ass'y Removal

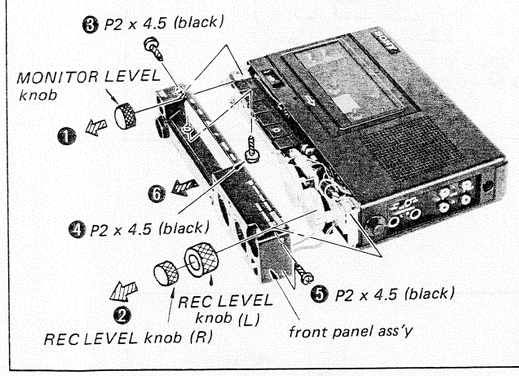

Cassette Lid Ass'y and Stabilizer Board Removal

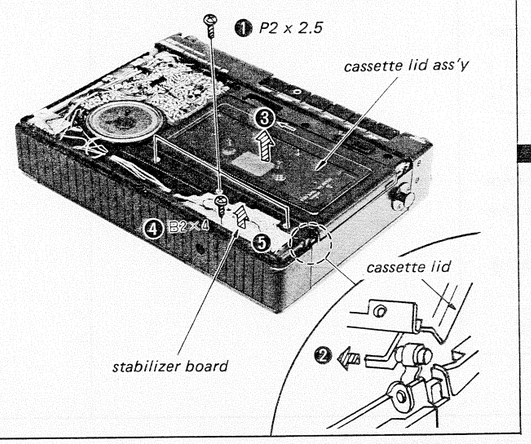

Cassette Frame Removal

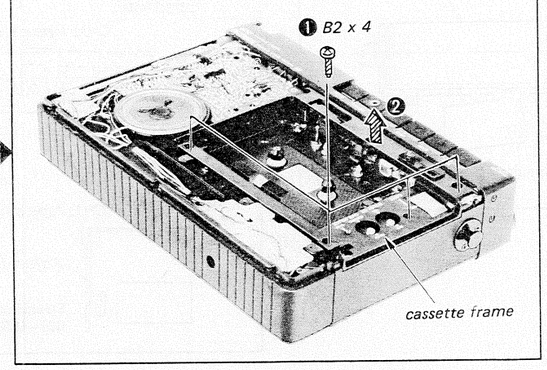

Motor Ass'y Removal

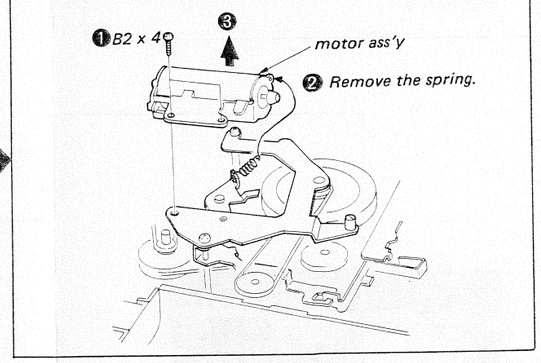

Chassis Removal

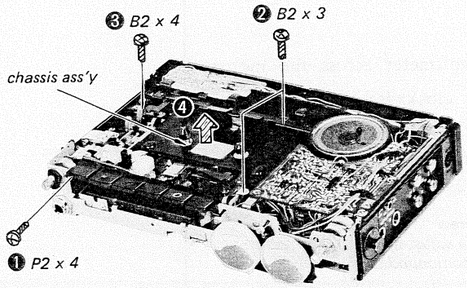

Bottom Cover Ass'y Removal

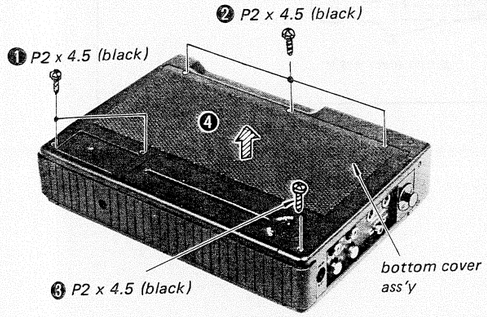

Audio Amp Board Removal

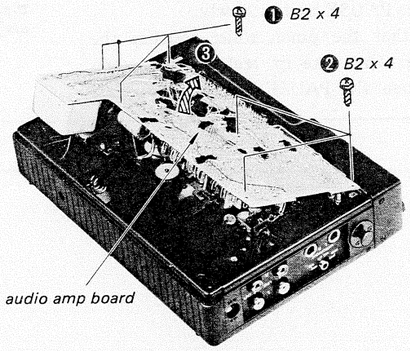

Flywheel Ass'y Removal

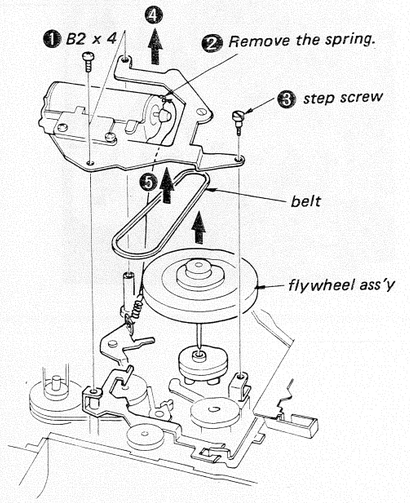

SECTION 3
ADJUSTMENTS

3-1. MECHANICAL ADJUSTMENTS

PRECAUTION

1. Clean the following parts with a denatured-alcohol-moistened swab:
   - record/playback head
   - erase head
   - capstan
   - pinch roller
   - rubber belts
   - idlers
2. Demagnetize the rocrd/playback head with a head demagnetizer.
3. Do not use a magnetized screwdriver for the adjustments.
4. After the adjustments, apply suitable locking compound to the parts adjusted.
5. The adjustments should be performed with the rated power supply voltage unless otherwise noted.

Motor Pressure Measurement
– playback mode –

1. Place the set vertically.
2. Push the end of motor with the spring scale as shown. The flywheel will not stop rotating.
3. Measure the pressure of motor against the flywheel when the flywheel starts to rotate, while returning the spring scale slowly.

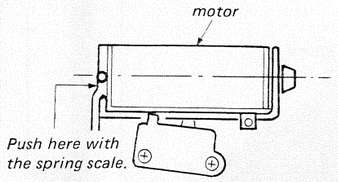

Specification: 50–90g (1.76–3.17 oz)

CrO_2 Tape Detecting Lever Adjustment
– stop mode –

1. Insert the tape cassette (except for CrO_2 tape) into the set.
2. Push the CrO_2 tape detecting lever in the direction of the arrow.
   Make sure that the clearance between the cassette and CrO_2 tape detecting lever is 0.3–0.5mm (1/64"). If necessary, bend the lever.
3. Make sure that the miniature switch (S902) is turned off when returning the CrO_2 tape detecting lever to the original position.

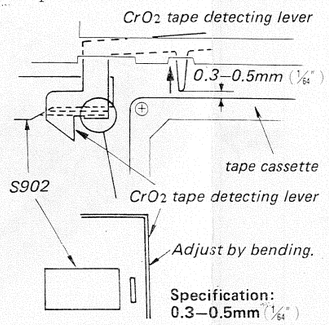

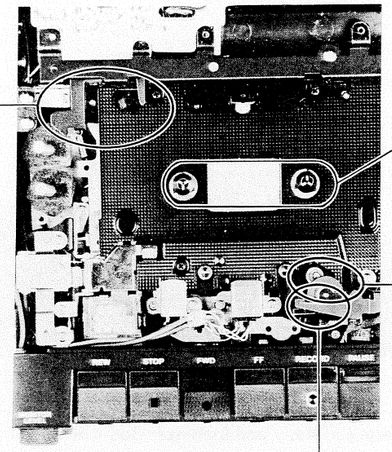

Torque Measurement	
FWD torque	28 – 48 g·cm (0.39 – 0.66 oz·inch)
FF torque	more than 100 g·cm (1.38 oz·inch)
REW torque	more than 70 g·cm (0.96 oz·inch)
Back-tension torque	less than 5 g·cm (0.07 oz·inch)

Pinch Roller Pressure Adjustment
– playback mode –

1. Hook the pinch roller with a spring scale.
2. Pull the spring scale.
3. Slowly return the pinch roller and read the spring scale as soon as the pinch roller starts to rotate.

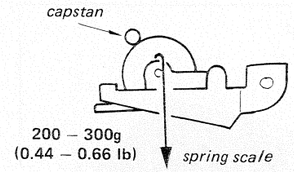

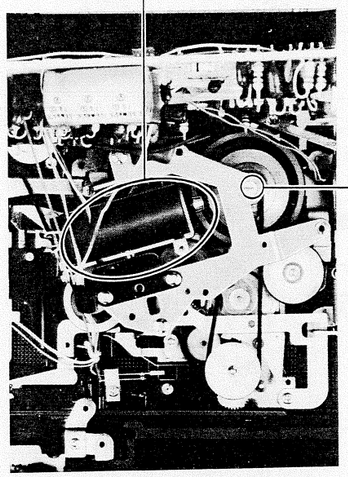

Thrust Adjustment
– playback mode –

1. Connect a dc voltmeter across the motor.
2. Turn the screw clockwise for the position where the meter reading suddenly increases.
3. Loosen the screw ¼ turn from the position obtained in step 2.

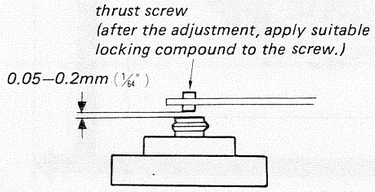

Pause Timing Adjustment
– playback mode –

1. Adjust the position of pinch-lever release plate ass'y so that the pinch roller and the take-up reel spindle stop rotating at the same time when depressing the PAUSE button slowly.
2. Make sure that the pinch roller touches the capstan after the take-up reel spindle starts to rotate when the PAUSE button is released.

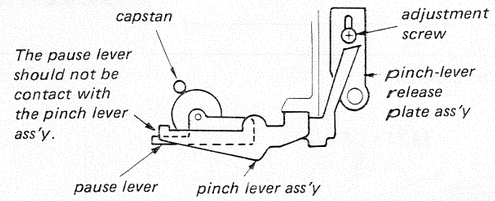

3-2. ELECTRICAL ADJUSTMENTS

Note: The adjustment should be performed in the order given in this service manual. The adjustments should be performed for both L-CH and R-CH.

Test Equipment/Tools Required:

audio oscillator (af osc)
VTVM
digital frequency counter
speed checker SONY LFM-30
oscilloscope
attenuator (600Ω)
non-magnetic screwdriver
resistors ... 300Ω (¼W), 10kΩ (¼W), 100kΩ (¼W)
blank tapes (completely erased with bulk eraser)
SONY CS-10 (HF), CS-20 (CrO_2), CS-30 (Fe-Cr)

Set the TAPE SELECT switch in accordance with the tape used as follows.

Tape	TAPE SELECT switch
CS-10	NORMAL
CS-20	CrO_2
CS-30	Fe-Cr

SONY test tapes
P-4-A81S (6.3kHz, −10dB)
P-4-L81 (333Hz, 0dB)
WS-48 (3kHz, 0dB)

Switches and controls should be set as follows unless otherwise specified.
DOLBY NR switch: OFF
TAPE SELECT switch: NORMAL
LIMITER switch: OFF
MIC ATT switch: 0 dB

Test Equipment Connections:

Input side:

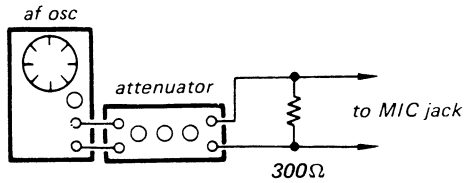

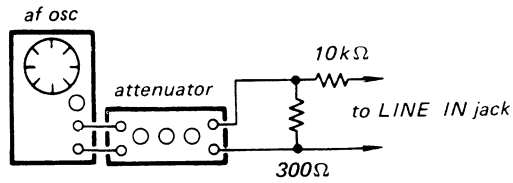

Standard Record:

Deliver the standard input signal level to the input jack and set the REC LEVEL control to obtain the standard output signal level.

Standard Input Level

	MIC	LINE IN
source impedance	300Ω	10kΩ
input level	0.77mV (−60dB)	0.25V (−10dB)

Standard Output Level

	LINE OUT
load impedance	100kΩ
output level	0.44V (−5dB)

Tape Speed Adjustment

Procedure:

Mode: Playback

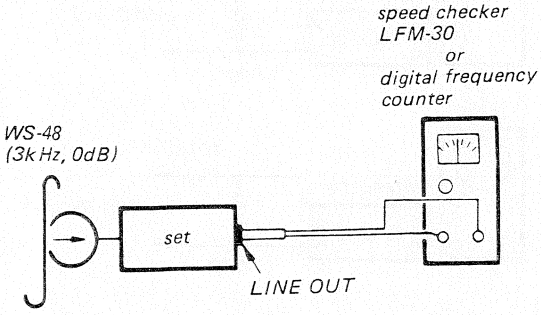

Adjust RV701 to obtain the specified values below.

Specification:

Speed checker	Digital frequency counter
−1.0 ~ +1.0%	2,970 ~ 3,030Hz

Adjustment Location:

– audio amp board (conductor side) –

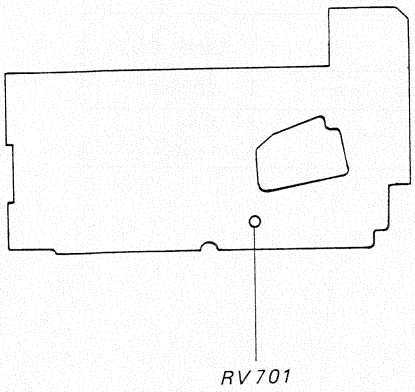

Record/playback Head Azimuth Adjustment

Procedure:

1. Mode: Playback

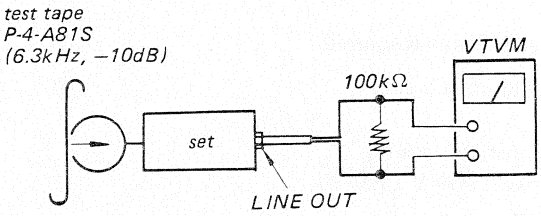

2. Turn the adjustment screw for maximum level and set it to the mechanical mid position between L-CH and R-CH peak positions.

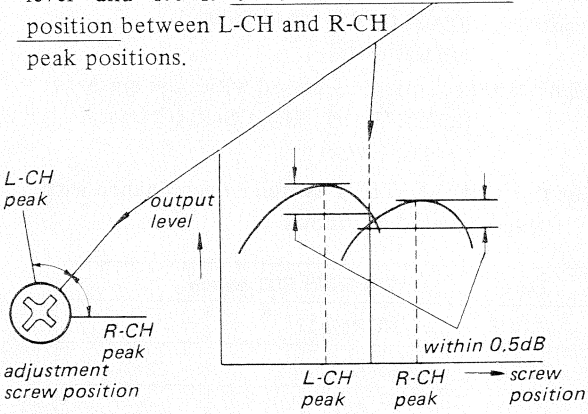

3. Mode: Playback

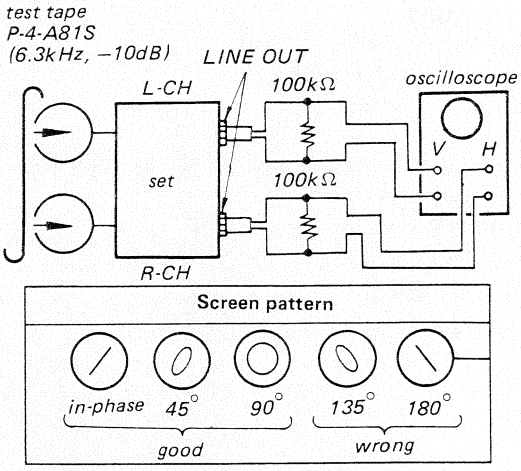

Adjustment Location:

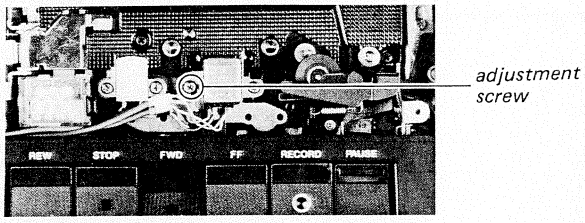

Playback Level Adjustment

Procedure:

1. Mode: Playback

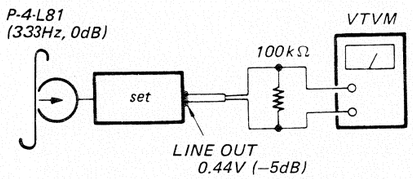

2. Adjust RV401 (L-CH) and RV501 (R-CH) to obtain 0.56V (−3dB) VTVM reading.
3. Make sure that the LINE OUT level does not change when the mode is changed from playback to stop several times.

Specification:

LINE OUT level: 0.52 – 0.58V (−3.5 to −2.5dB)

Adjustment Location:

– audio amp board (conductor side) –

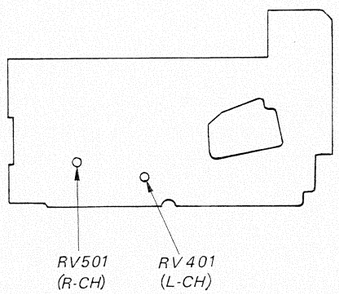

Battery Indication Meter Adjustment

Procedure:

1. Mode: Playback (with no cassette installed)
2. Feed 2.2V dc to DC IN 6V jack.
3. When the BATT CHECK/LIGHT button is pushed, adjust RV301 so that the meter indicates the position as shown below.

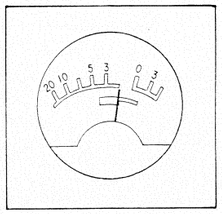

level meter

Adjustment Location:

– record amp board –

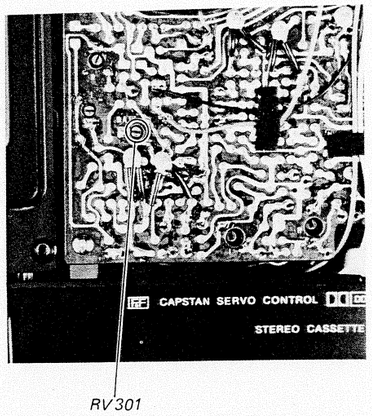

Record Bias Adjustment

Procedure:

1. Mode: Record
   TAPE SELECT switch: NORMAL
   LIMITER switch: OFF

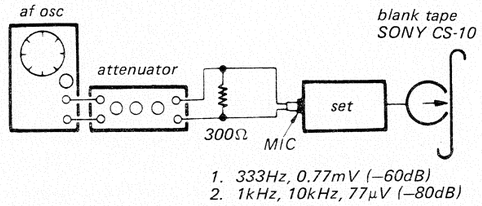

2. Feed a signal of 333Hz, 0.77mV (−60dB) into the MIC jack.
3. Adjust the REC LEVEL control for −5dB (0.44V) on the VTVM.
4. Feed the signals of 1kHz and 10kHz, 77μV (−80dB) into the MIC jack.
5. Mode: Playback

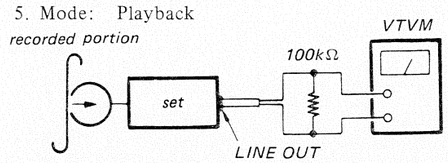

6. Play back the signals of 1kHz and 10kHz, and connect the pattern by soldering for specified values. If necessary, connect the two or more patterns.

Specification:

±0.5dB or less (10kHz level deviation from 1kHz)

Adjustment Location:

– audio amp board (conductor side) –

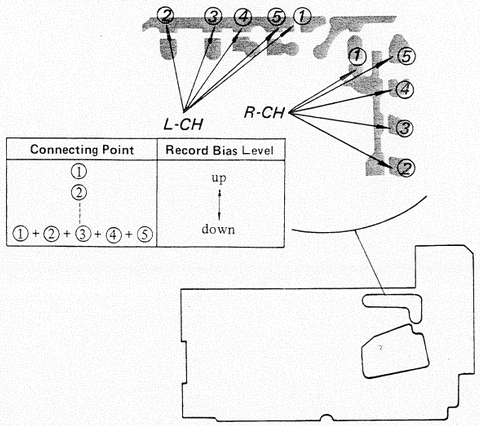

Connecting Point	Record Bias Level
① ② ⋮ ①+②+③+④+⑤	up ↑ ↓ down

Record Level Adjustment

Procedure:

1. Mode: Standard record (See page 9)
   MIC ATT switch: 0dB
   LIMITER switch: OFF

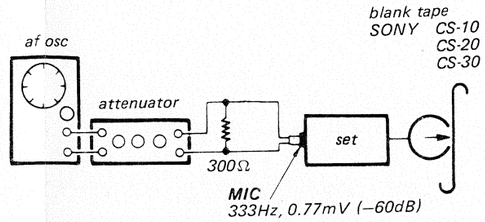

2. Mode: Playback

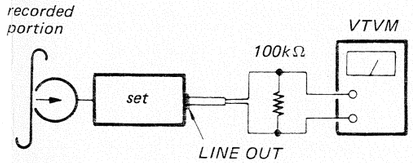

3. Adjust RV402 (L-CH) and RV502 (R-CH) to obtain the specified VTVM reading.

Specification:

Tape	TAPE SELECT switch	LINE OUT level
CS-10	NORMAL	0.40 – 0.45V (−6.0 to −5.0dB)
CS-20	automatically changed to CrO_2 position.	0.31 – 0.50V (−8.0 to −4.0dB)
CS-30	Fe-Cr	

Adjustment Location:

– audio amp board (Conductor Side) –

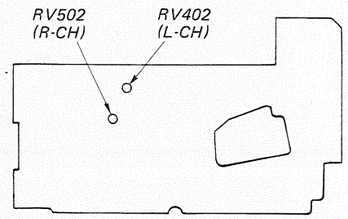

Record Bias Adjustment

Procedure:

1. Mode: Record
   TAPE SELECT switch: NORMAL
   LIMITER switch: OFF

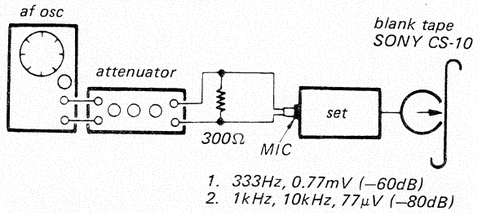

2. Feed a signal of 333Hz, 0.77mV (–60dB) into the MIC jack.
3. Adjust the REC LEVEL control for –5dB (0.44V) on the VTVM.
4. Feed the signals of 1kHz and 10kHz, 77μV (–80dB) into the MIC jack.
5. Mode: Playback

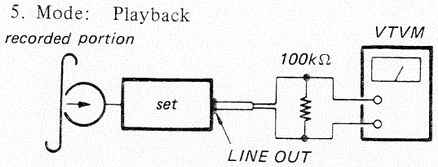

6. Play back the signals of 1kHz and 10kHz, and connect the pattern by soldering for specified values. If necessary, connect the two or more patterns.

Specification:

±0.5dB or less (10kHz level deviation from 1kHz)

Adjustment Location:

– audio amp board (conductor side) –

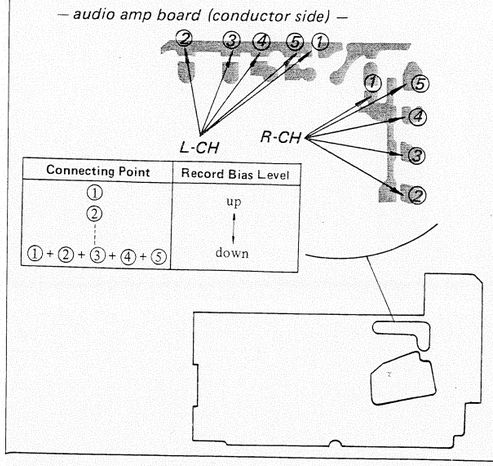

Connecting Point	Record Bias Level
①	up
②	↑
⋮	⋮
①+②+③+④+⑤	down

Record Level Adjustment

Procedure:

1. Mode: Standard record (See page 9)
   MIC ATT switch: 0dB
   LIMITER switch: OFF

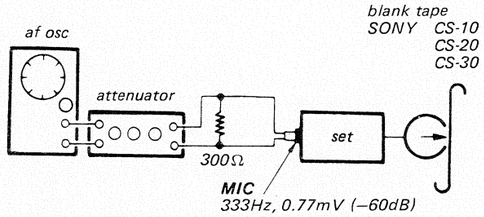

2. Mode: Playback

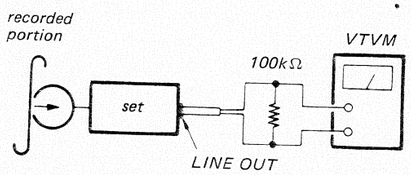

3. Adjust RV402 (L-CH) and RV502 (R-CH) to obtain the specified VTVM reading.

Specification:

Tape	TAPE SELECT switch	LINE OUT level
CS-10	NORMAL	0.40 – 0.45V (–6.0 to –5.0dB)
CS-20	automatically changed to CrO_2 position.	0.31 – 0.50V (–8.0 to –4.0dB)
CS-30	Fe-Cr	

Adjustment Location:

– audio amp board (Conductor Side) –

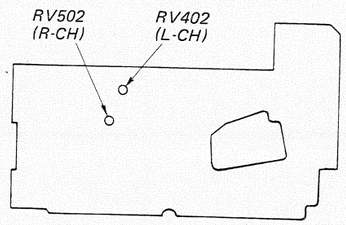

Level Meter Calibration

Procedure:

1. Mode: Standard record (See page 9.)
   MIC ATT switch: 0dB
   LIMITER switch: OFF

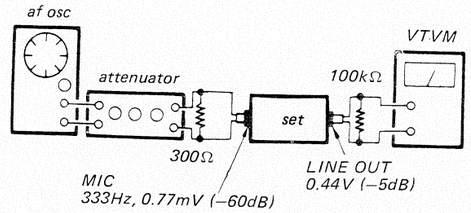

2. Make sure that the VTVM reads 0.44V (–5dB).
3. Adjust RV101 (L-CH) and RV201 (R-CH) for specified reading on the level meter.

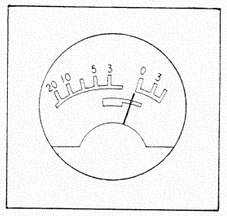

level meter

Adjustment Location:

– record amp board –

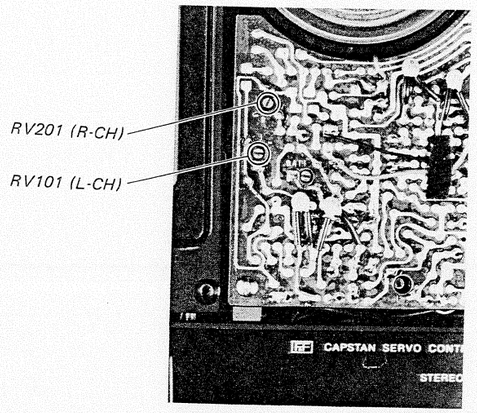

MPX Filter Adjustment

Procedure:

1. Mode: Record
2. Feed a signal of 333Hz, 0.25V (–10dB) into the LINE IN jack.
3. Adjust the REC LEVEL control for –5dB (0.44V) on the VTVM.
4. Feed a signal of 19kHz, 0.25V (–10dB) into the LINE IN jack.
5. Adjust L102 (L-CH) and L202 (R-CH) for minimum reading on the VTVM.

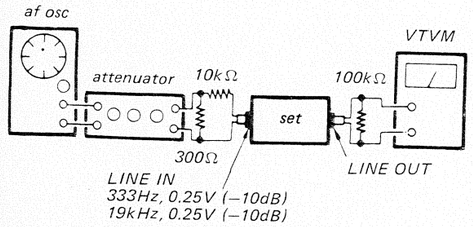

Specification:

23dB or more (level difference between 333Hz and 19kHz)

Adjustment Location:

– record amp board –

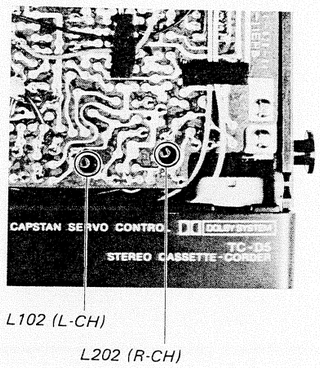

4-1. MOUNTING DIAGRAM

— Conductor Side —

Replacement Semiconductors:
(See page 20)

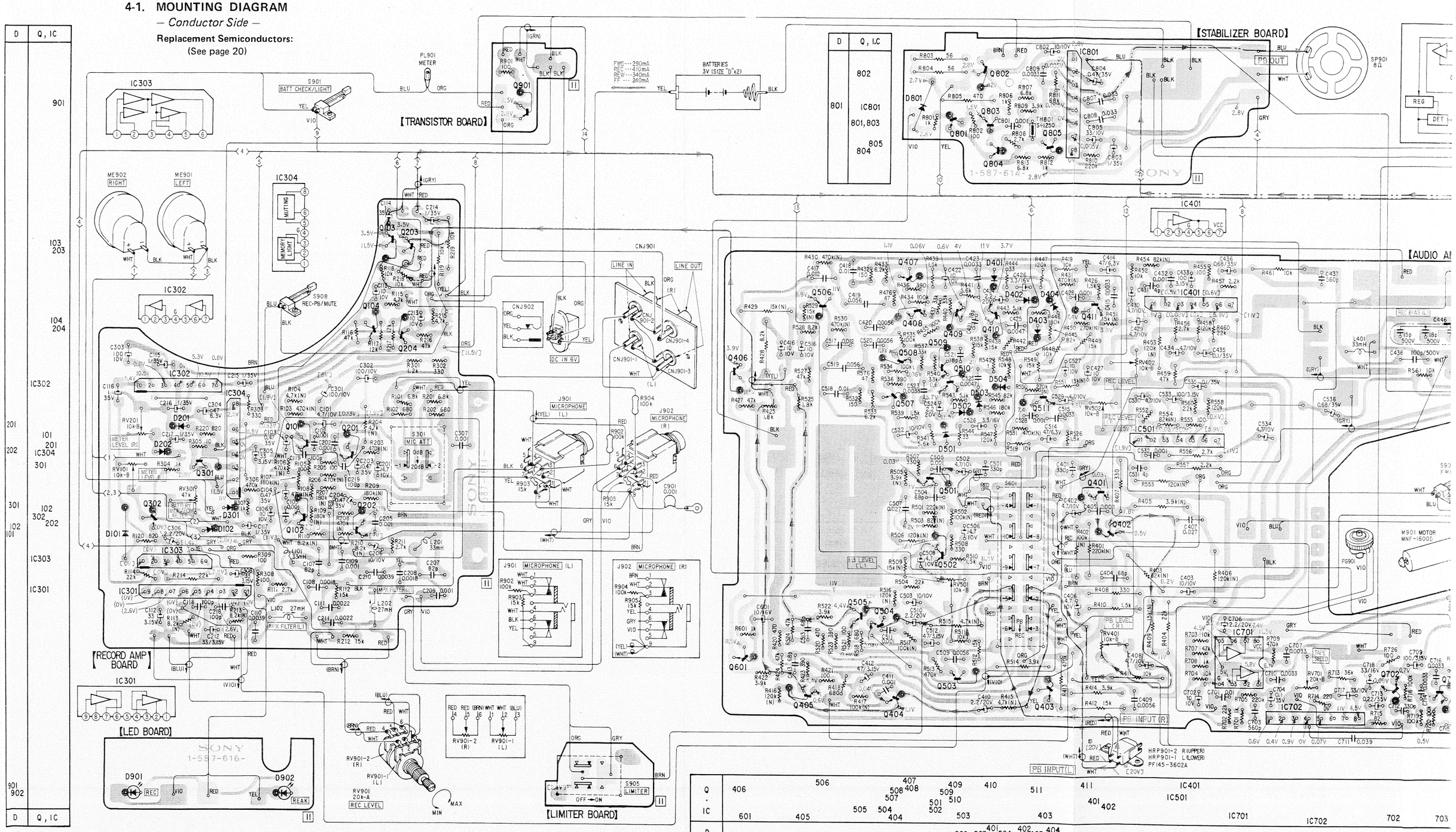

D	Q, IC
	901
	103 203
	104 204
	IC302
201	
202	101 201 IC304
	301
301	102 302 202
102 101	
	IC303
	IC301
901 902	
D	Q, IC

D	Q, I.C
801	802 IC801 801, 803 805 804

Q, IC	D
406 601	
405	
506 505	
504	
407 408 508 507 404	
409 509 510 501 502 503	501 502
410	503
511	401 504
403	402 403 404
411 401 402	
IC401 IC501	
IC701	
IC702	
702	
703	

Note:
- ■ : parts mounted on the conductor side.
- : B+ pattern.
- ——— : L-CH playback signal path
- ——— : R-CH playback signal path
- : Measured by using a VTVM
- [ ] : in record mode
- ( ) : in FF or REW mode
- ¦ ¦ : When S905 (LIMITER) is set to ON in record mode.
- (( )) : When S902 (CrO_2) is off and S903 (TAPE SELECT) is set to Fr-O_2 in record mode.

no mark: in playback mode
The total current is taken with no cassette installed.

- DC resistance measurements are with coils and transformers connected on the circuit board, and are approximate.

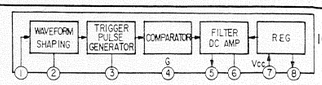

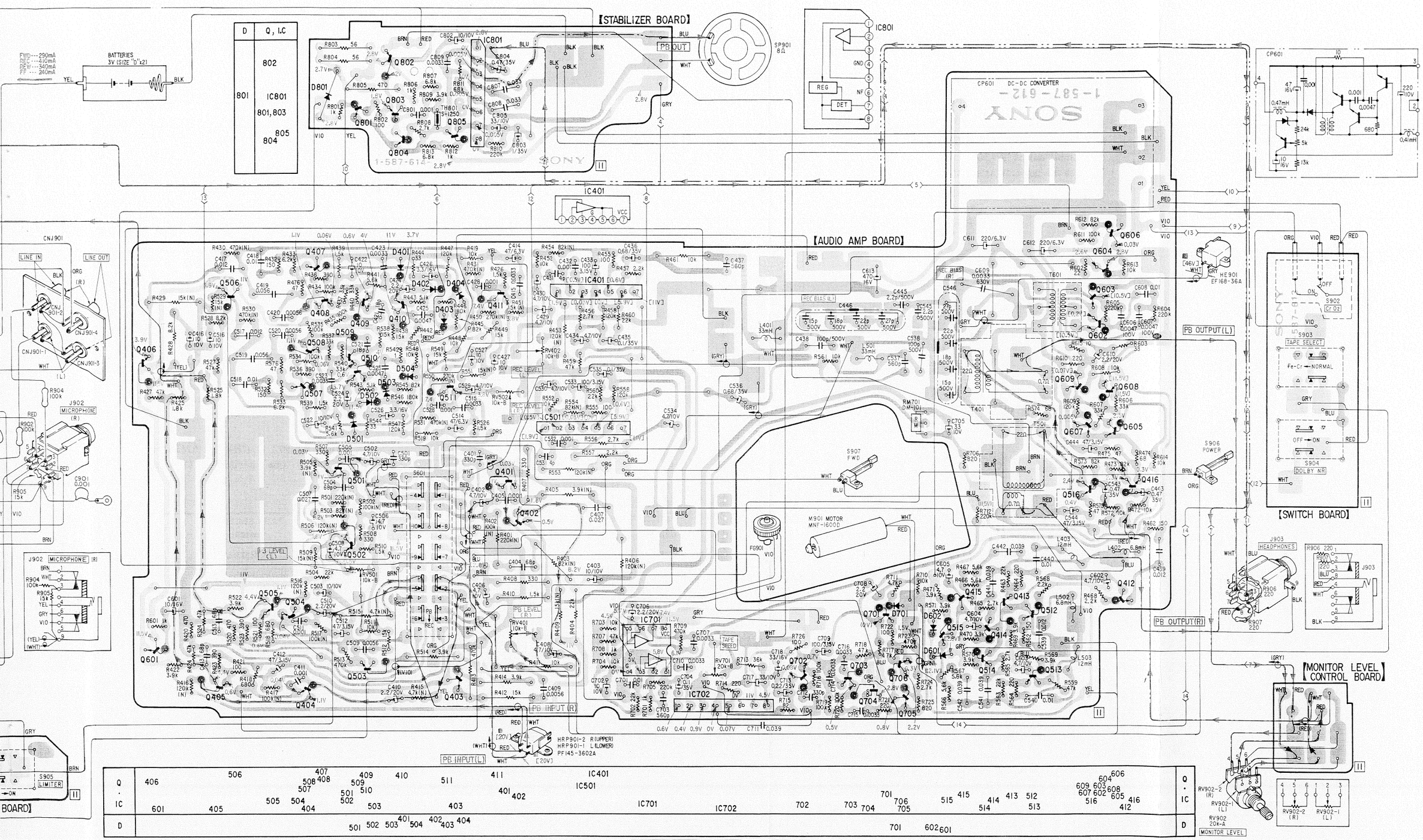

- DC resistance measurements are with coils and transformers connected on the circuit board, and are approximate.

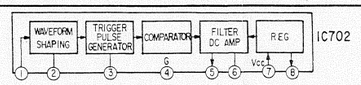

4-2. SCHEMATIC DIAGRAM

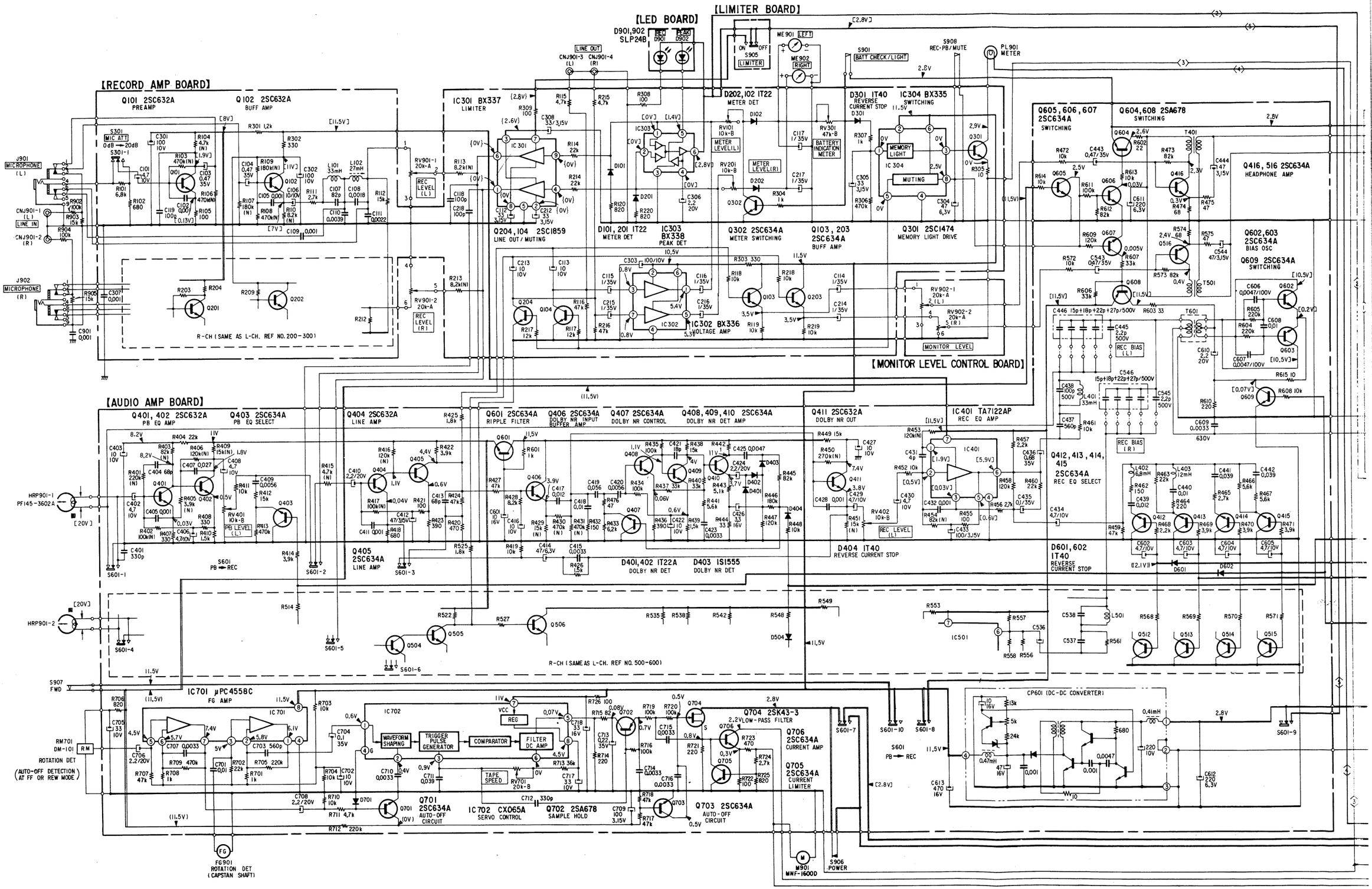

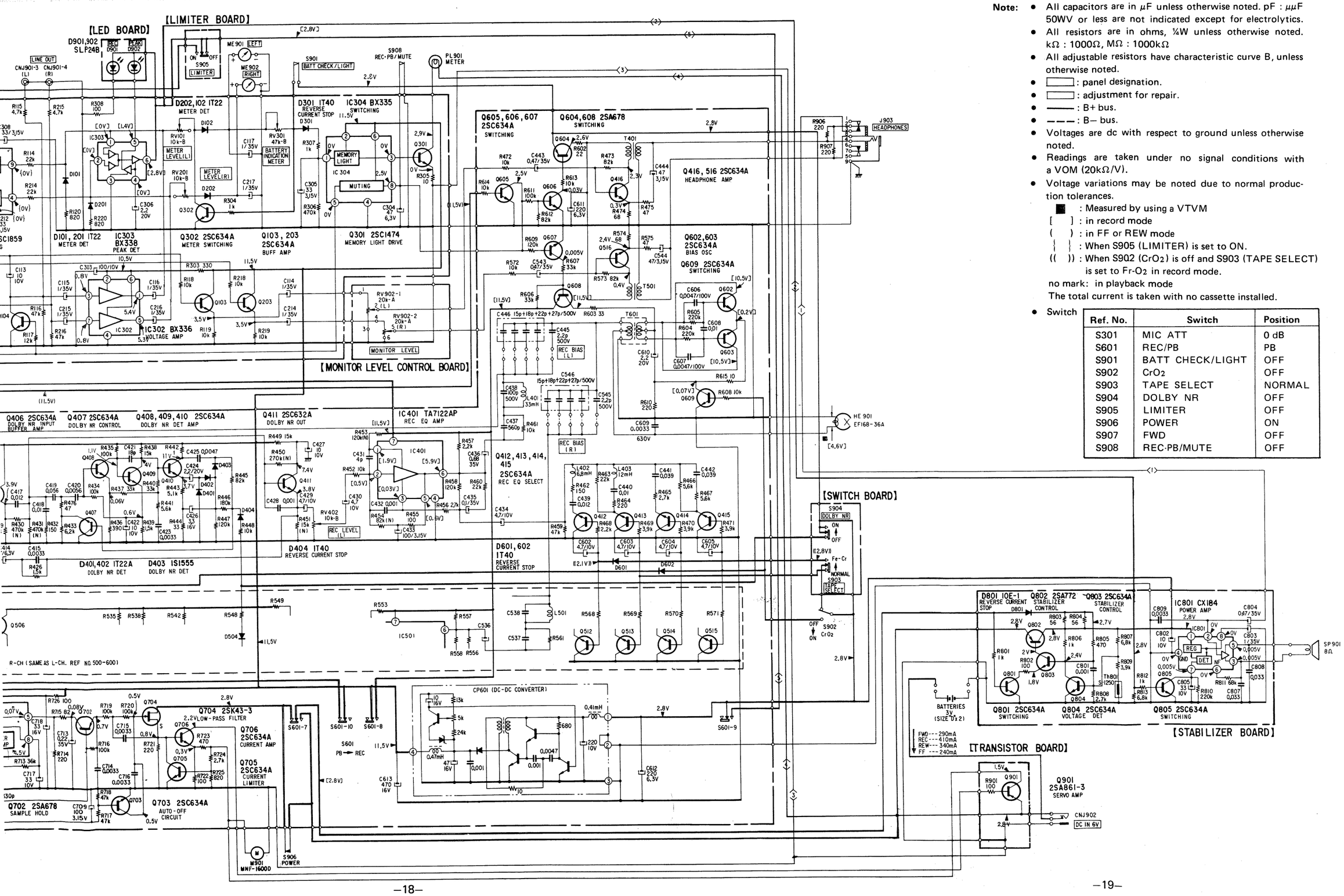

Note:

- All capacitors are in μF unless otherwise noted. pF : μμF 50WV or less are not indicated except for electrolytics.
- All resistors are in ohms, ¼W unless otherwise noted. kΩ : 1000Ω, MΩ : 1000kΩ
- All adjustable resistors have characteristic curve B, unless otherwise noted.
- ▭ : panel designation.
- ▭ : adjustment for repair.
- ——— : B+ bus.
- – – – : B− bus.
- Voltages are dc with respect to ground unless otherwise noted.
- Readings are taken under no signal conditions with a VOM (20kΩ/V).
- Voltage variations may be noted due to normal production tolerances.
  - ■ : Measured by using a VTVM
  - [ ] : in record mode
  - ( ) : in FF or REW mode
  - { } : When S905 (LIMITER) is set to ON.
  - (( )) : When S902 (CrO_2) is off and S903 (TAPE SELECT) is set to Fr-O_2 in record mode.
  - no mark: in playback mode
  - The total current is taken with no cassette installed.
- Switch

Ref. No.	Switch	Position
S301	MIC ATT	0 dB
S601	REC/PB	PB
S901	BATT CHECK/LIGHT	OFF
S902	CrO_2	OFF
S903	TAPE SELECT	NORMAL
S904	DOLBY NR	OFF
S905	LIMITER	OFF
S906	POWER	ON
S907	FWD	OFF
S908	REC-PB/MUTE	OFF

Replacement Semiconductors

For replacement, use semiconductors except in ( ).

Q101, 102, 201, 202, 401, 402 Q404, 411, 501, 502, 504, 511 2SC1362 (2SC632A)	IC302: BX336	IC303: BX338	D801: 10E2 (10E1)
Q103, 203, 302, 403, 405–410 Q412–416, 503, 505–510, 512–516 Q601–603, 605–607 Q609, 701, 703, 705, 706 Q801, 803–805 2SC1364 (2SC634A)	IC304: BX335	IC401, 501: TA7122AP	D901, 902 SLP24B
	IC701: μPC4558C	IC702: CX065A	Q704: 2SK43-4 (2SK43-3)
Q104, Q204: 2SC1859	IC801: CX184	RM701: DM101	
Q604, 608, 702 2SA678	Q301: 2SC1474 (2SC1474-3)	D101, 201 D102, 202 1T22AM (1T22)	D301, 404, 504 D601, 602, 701 1S1555 (1T40)
Q901: 2SA861 (2SA861-3)	Q802: 2SA772-14 (2SA772)	D401, 402, 501, 502 1T22AM (1T22A)	D403, 503: 1S1555
	IC301: BX337		

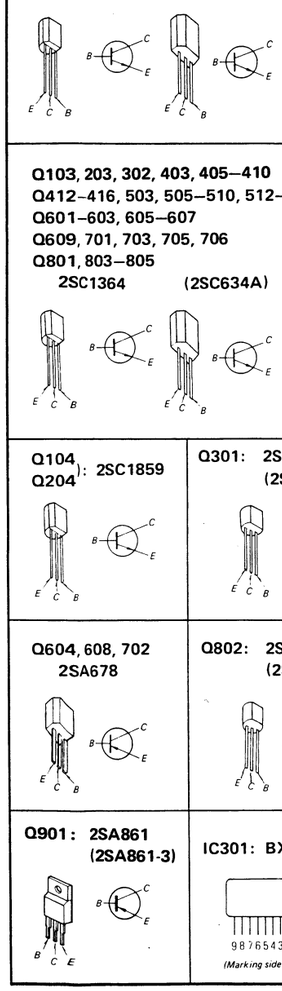

SECTION 5
EXPLODED VIEWS

5-1.

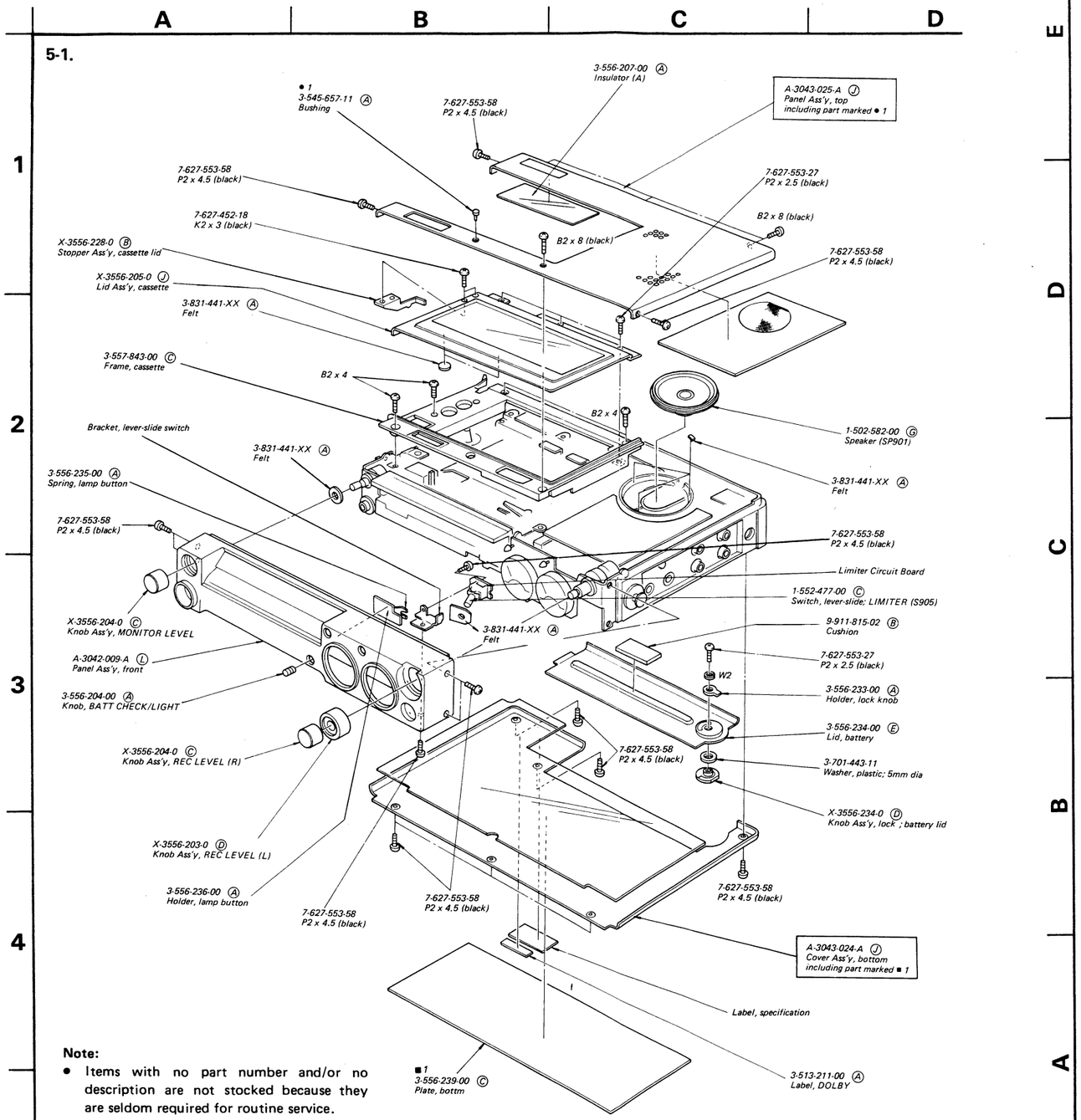

Note:

- Items with no part number and/or no description are not stocked because they are seldom required for routine service.
- All screws are Phillips (cross recess) type unless otherwise noted.
  (–) = slotted head
- Circled letters (Ⓐ to Ⓩ) are applicable to European models only.

SECTION 5
EXPLODED VIEWS

5-1.

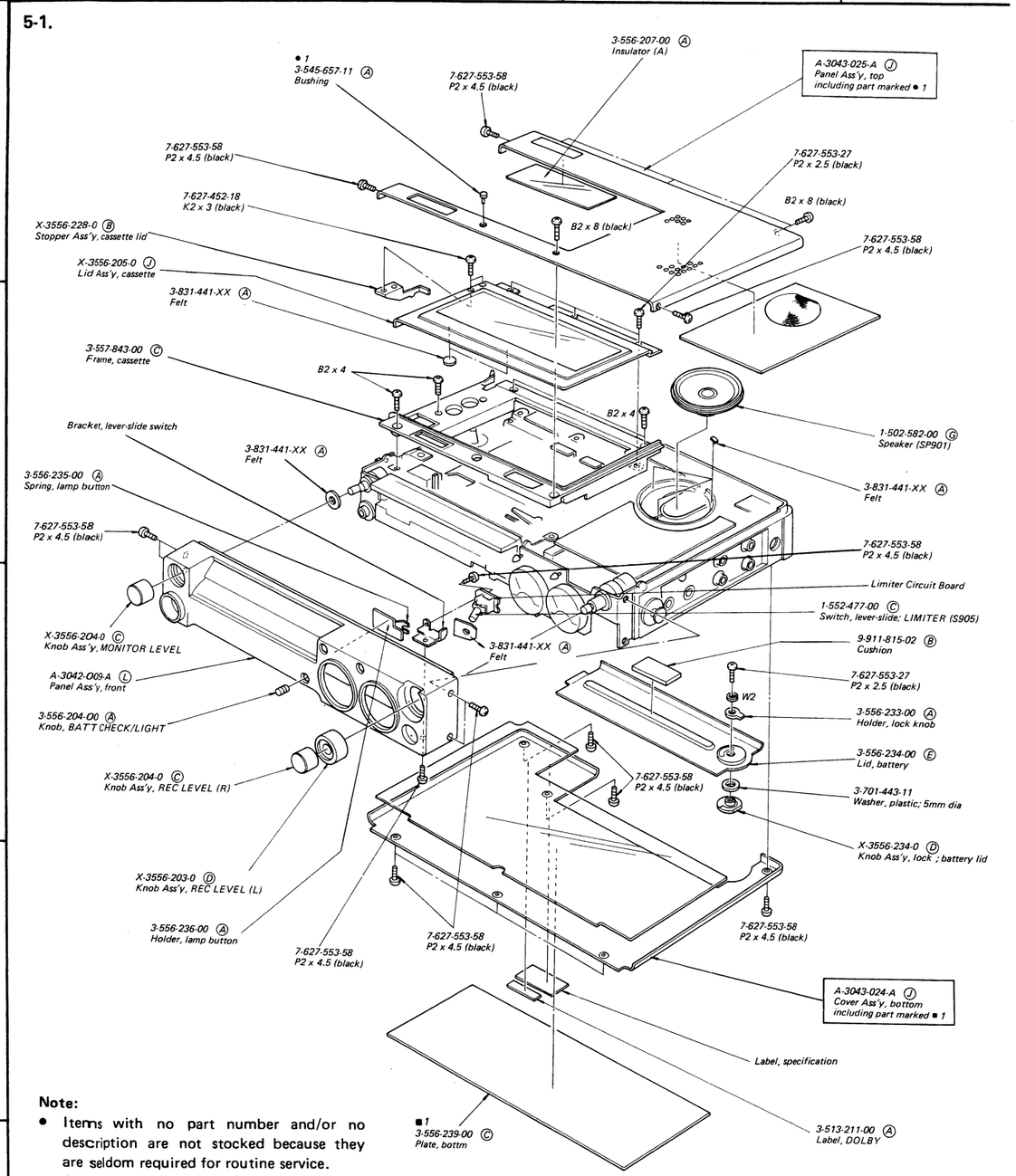

Note:

- Items with no part number and/or no description are not stocked because they are seldom required for routine service.
- All screws are Phillips (cross recess) type unless otherwise noted.
  (—) = slotted head
- Circled letters ((A) to (Z)) are applicable to European models only.

5-2.

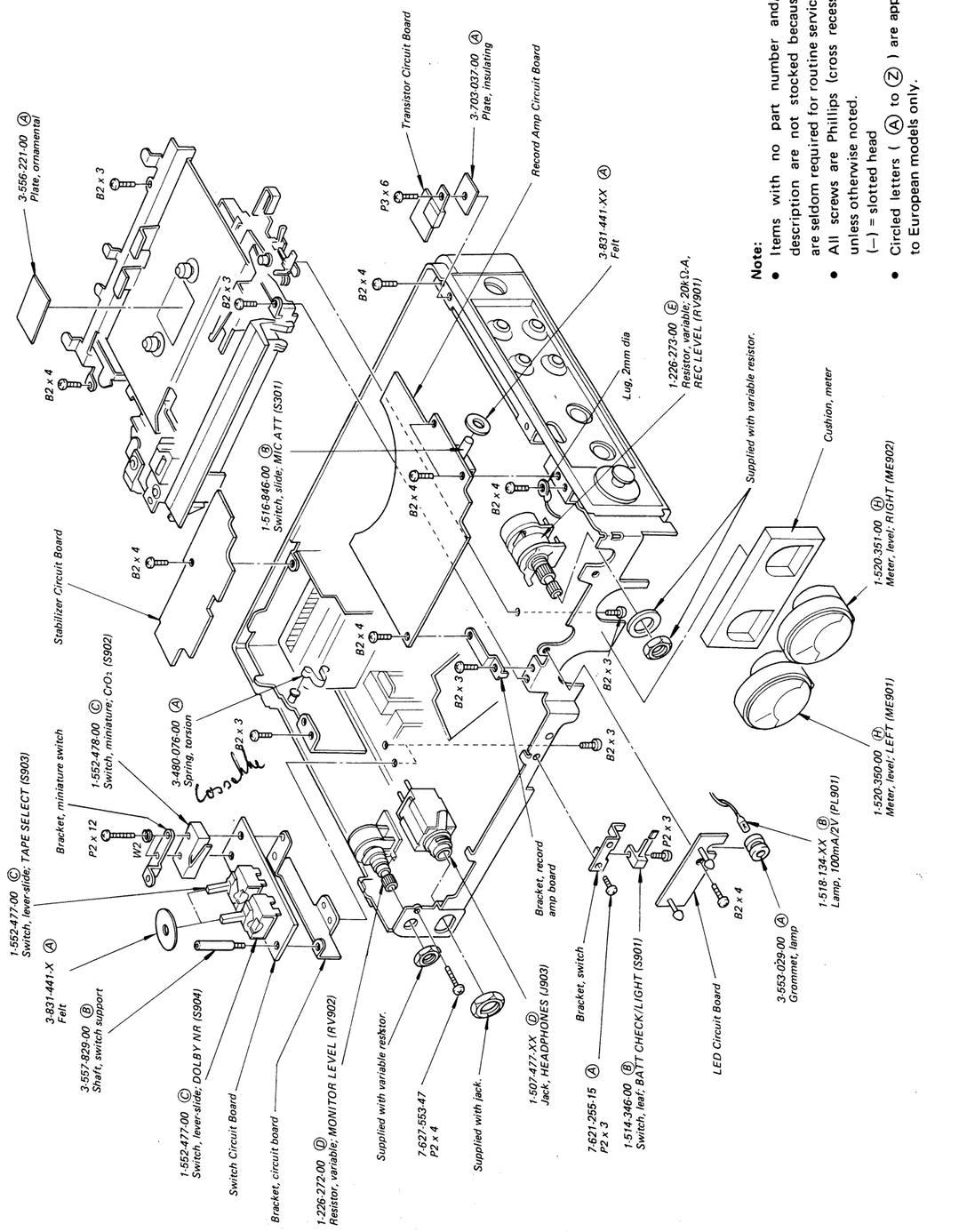

Note:

- Items with no part number and/or no description are not stocked because they are seldom required for routine service.
- All screws are Phillips (cross recess) type unless otherwise noted.
  (—) = slotted head
- Circled letters ((A) to (Z)) are applicable to European models only.

5-3.

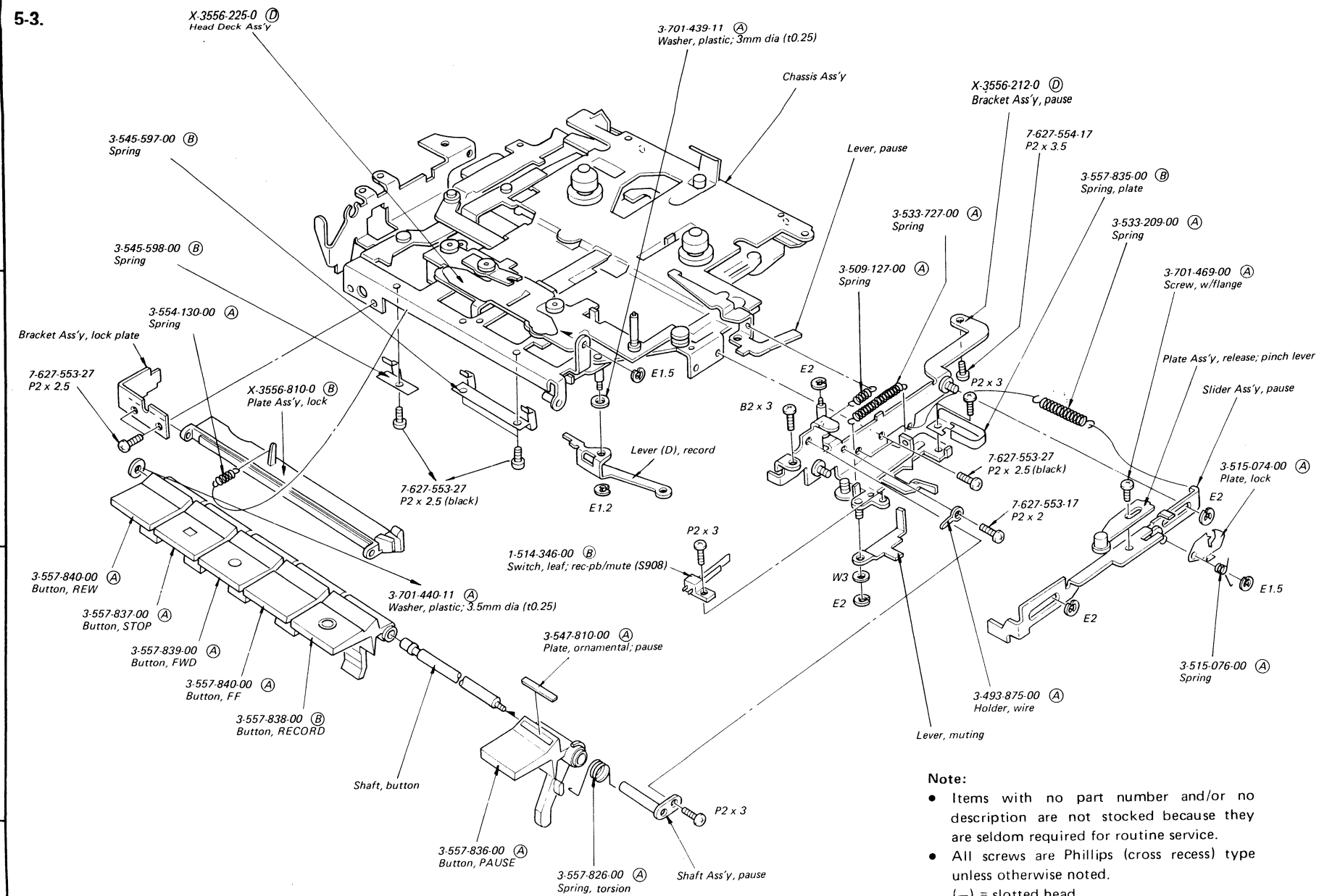

Note:

- Items with no part number and/or no description are not stocked because they are seldom required for routine service.
- All screws are Phillips (cross recess) type unless otherwise noted.
  (–) = slotted head
- Circled letters ((A) to (Z)) are applicable to European models only.

5-4.

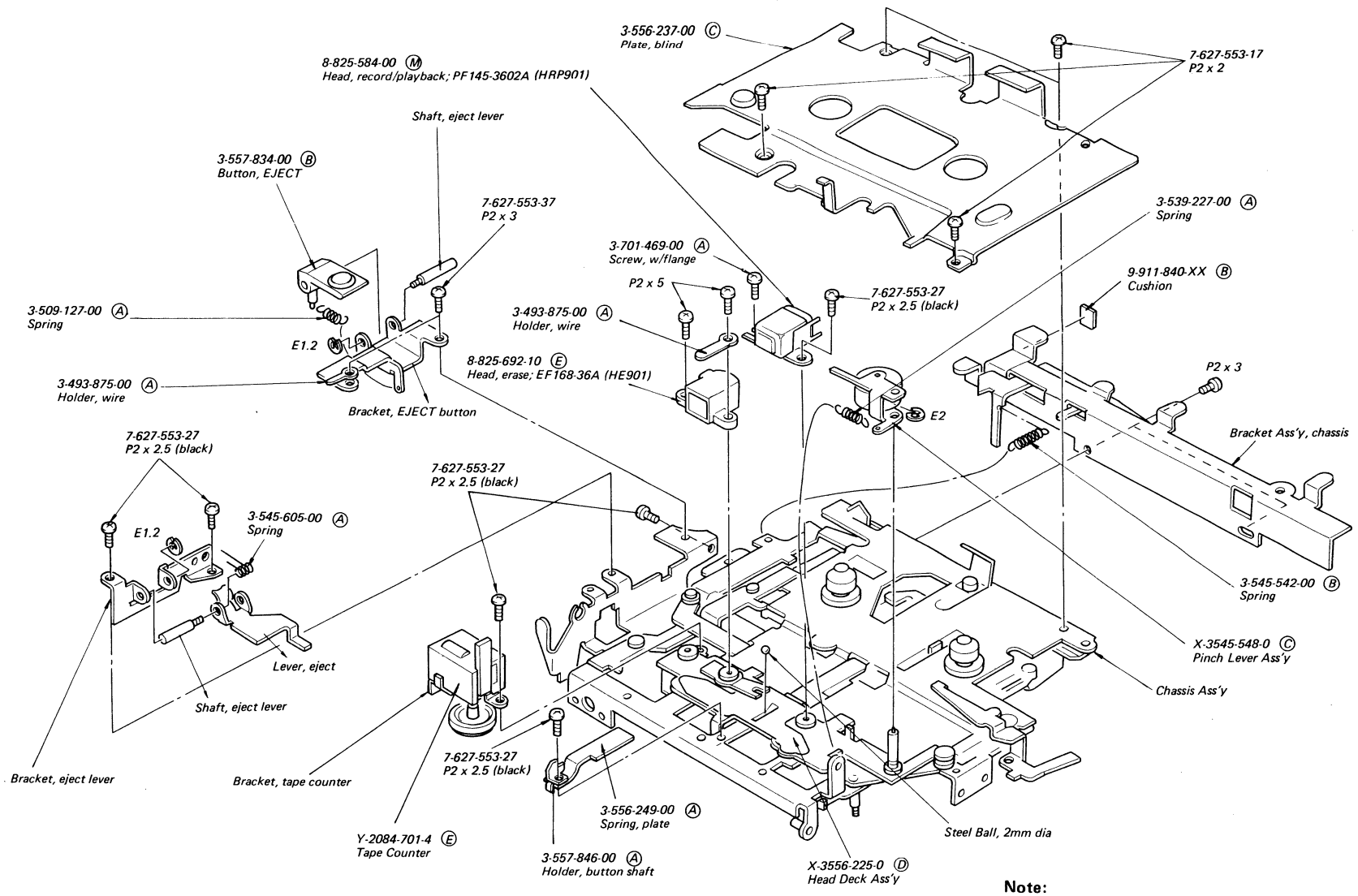

Note:

- Items with no part number and/or no description are not stocked because they are seldom required for routine service.
- All screws are Phillips (cross recess) type unless otherwise noted.
  (–) = slotted head
- Circled letters (Ⓐ to Ⓩ) are applicable to European models only.

5-5.

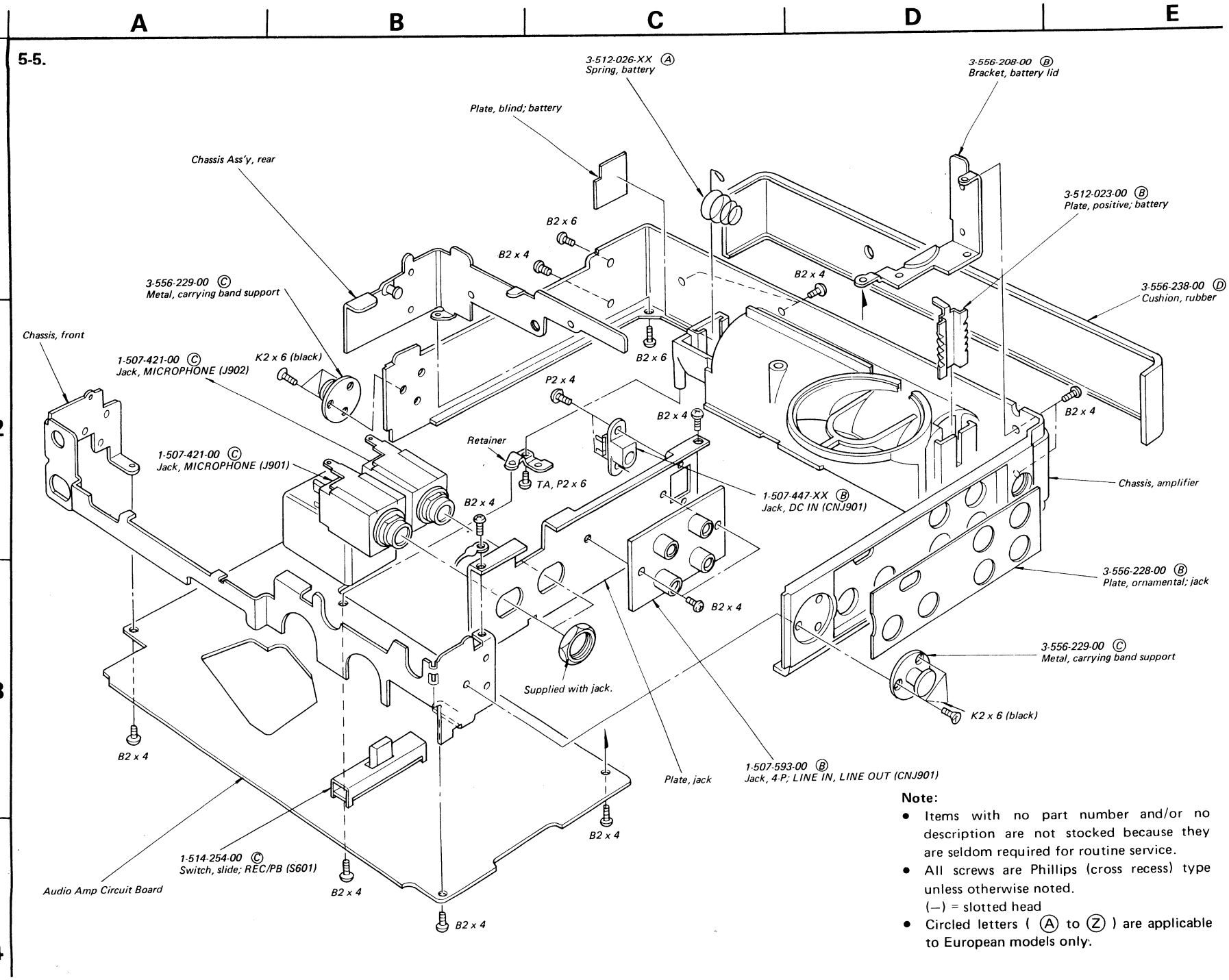

Note:

- Items with no part number and/or no description are not stocked because they are seldom required for routine service.
- All screws are Phillips (cross recess) type unless otherwise noted.
  (–) = slotted head
- Circled letters (Ⓐ to Ⓩ) are applicable to European models only.

5-6.

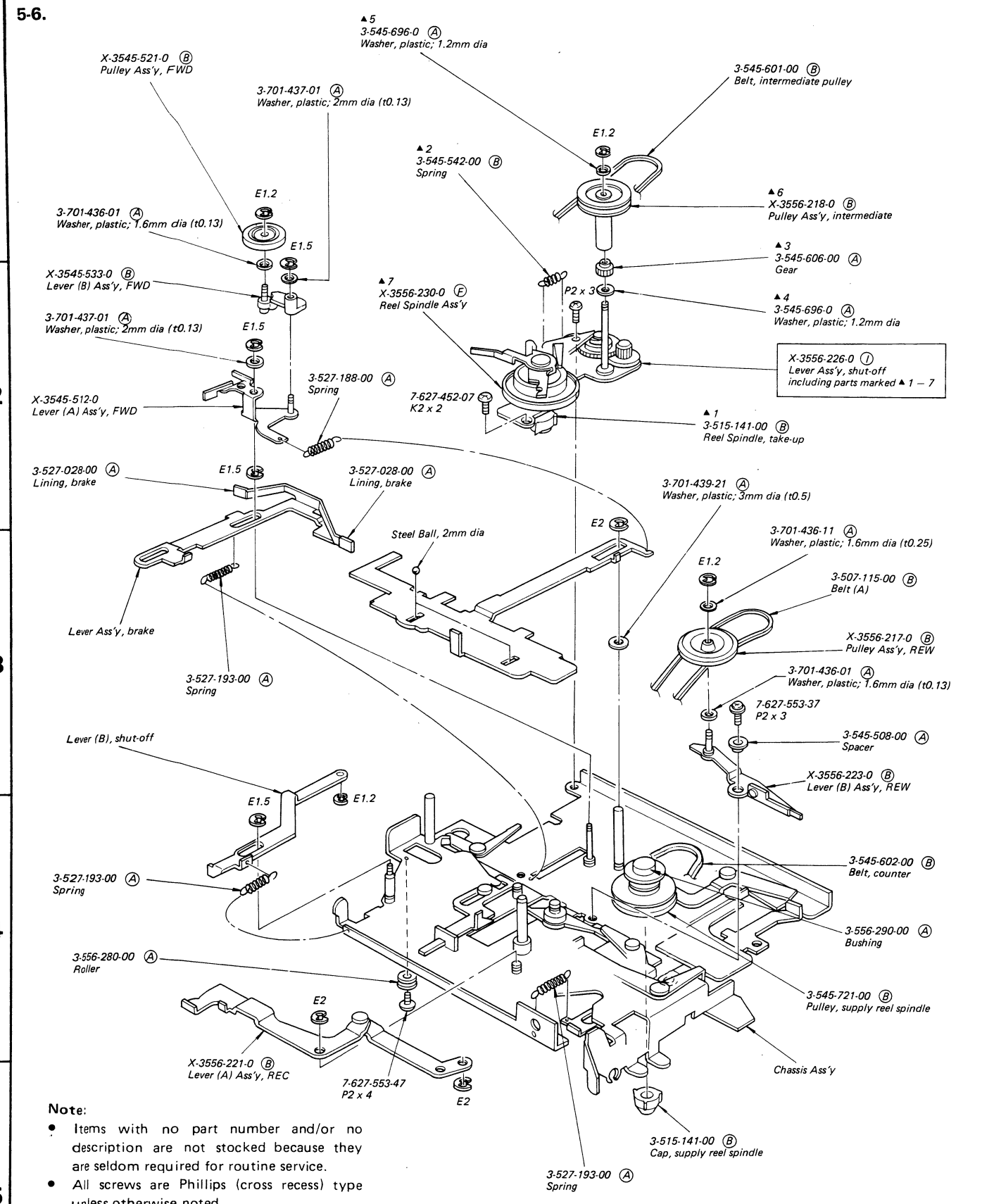

Note:

- Items with no part number and/or no description are not stocked because they are seldom required for routine service.
- All screws are Phillips (cross recess) type unless otherwise noted.
  (–) = slotted head
- Circled letters (Ⓐ to Ⓩ) are applicable to European models only.

5-7.

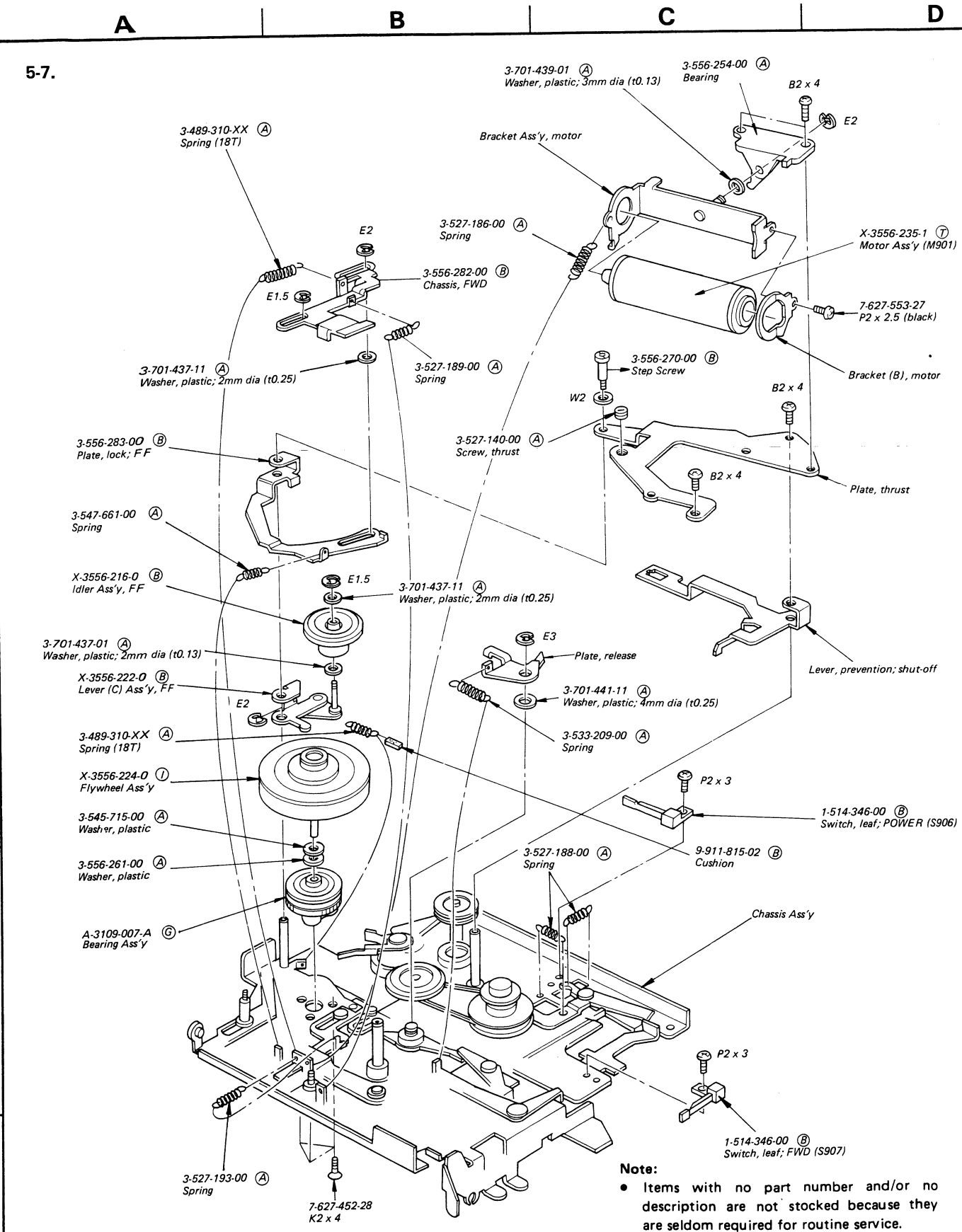

Note:

- Items with no part number and/or no description are not stocked because they are seldom required for routine service.
- All screws are Phillips (cross recess) type unless otherwise noted.
  (—) = slotted head
- (□□T) shows the number of coils in spring.
- Circled letters (Ⓐ to Ⓩ) are applicable to European models only.

• Circled letters (Ⓐ to Ⓩ) are applicable to European models only.

SECTION 6
ELECTRICAL PARTS LIST

Ref. No.	Part No.	Description
		SEMICONDUCTORS
		Transistors
⇒ Q101, 201, Q102, 202	8-729-665-47	Ⓑ 2SC1362
⇒ Q103, 203	8-729-663-47	Ⓑ 2SC1364
Q104, 204	8-765-052-20	Ⓑ 2SC1859
⇒ Q301	8-760-335-10	Ⓑ 2SC1474
⇒ Q302	8-729-663-47	Ⓑ 2SC1364
⇒ Q401, 501, Q402, 502	8-729-665-47	Ⓑ 2SC1362
⇒ Q403, 503	8-729-663-47	Ⓑ 2SC1364
⇒ Q404, 504	8-729-665-47	Ⓑ 2SC1362
⇒ Q405–410, Q505–510	8-729-663-47	Ⓑ 2SC1364
⇒ Q411, 511	8-729-665-47	Ⓑ 2SC1362
⇒ Q412–416, Q512–516	8-729-663-47	Ⓑ 2SC1364
⇒ Q601–603	8-729-663-47	Ⓑ 2SC1364
Q604	8-727-788-00	Ⓑ 2SA678
⇒ Q605–607	8-729-663-47	Ⓑ 2SC1364
Q608	8-727-788-00	Ⓑ 2SA678
⇒ Q609, 701	8-729-663-47	Ⓑ 2SC1364
Q702	8-727-788-00	Ⓑ 2SA678
⇒ Q703	8-729-663-47	Ⓑ 2SC1364
⇒ Q704	8-723-304-00	Ⓑ 2SK43-4
⇒ Q705, 706, Q801	8-729-663-47	Ⓑ 2SC1364
⇒ Q802	8-760-514-10	Ⓑ 2SA772-14
⇒ Q803–805	8-729-663-47	Ⓑ 2SC1364
⇒ Q901	8-763-213-00	Ⓒ 2SA861
		Diodes
⇒ D101, 201, D102, 202	8-719-422-21	Ⓐ 1T22AM
⇒ D301	8-719-815-55	Ⓐ 1S1555
⇒ D401, 501, D402, 502	8-719-422-21	Ⓐ 1T22AM
D403, 503	8-719-815-55	Ⓐ 1S1555
D404, 504, ⇒ D601, 602, D701	8-719-815-55	Ⓐ 1S1555
⇒ D801	8-719-200-02	Ⓑ 10E2
D901, 902	8-719-900-24	Ⓑ SLP24B
RM701	8-745-101-01	Ⓒ DM101
		ICs
IC301	8-743-370-00	Ⓘ BX337
IC302	8-743-360-00	Ⓖ BX336
IC303	8-743-380-00	Ⓕ BX338
IC304	8-743-350-00	Ⓗ BX335
IC401, 501	8-759-271-22	Ⓒ TA7122AP
IC701	8-759-145-58	Ⓓ μPC4558C
IC702	8-759-600-65	Ⓓ CX065A
IC801	8-751-840-00	Ⓕ CX184
		Thermistor
⇒ Th801	1-800-198-XX	Ⓒ S-1000
		COILS
L101, 201	1-407-879-00	Ⓑ 33mH, microinductor
L102, 202	1-407-938-00	Ⓑ 27mH, variable
L401, 501	1-407-212-XX	Ⓑ 33mH, microinductor
L402, 502	1-407-204-XX	Ⓑ 6.8mH, microinductor
L403, 503	1-407-207-XX	Ⓑ 12mH, microinductor
		TRANSFORMERS
T401, 501	1-427-448-00	Ⓒ Output
T601	1-433-200-00	Ⓑ Bias Oscillator

⇒ : Due to standardization, interchangeable replacements may be substituted for parts specified in the diagrams.

• Circled letters (Ⓐ to Ⓩ) are applicable to European models only.

CAPACITORS

All capacitors are in μF and tantalum unless otherwise noted. 50WV or less are not indicated except for electrolytics and tantalum. pF : μμF, elect : electrolytic

Ref. No.	Part No.	Description			
C101, 201	1-131-420-11	Ⓑ 4.7	10V		
C102, 202	1-102-074-11	Ⓐ 0.001		ceramic	
C103, 203 C104, 204	1-131-345-11	Ⓑ 0.47	35V		
C105, 205	1-102-074-11	Ⓐ 0.001		ceramic	
C106, 206	1-131-377-11	Ⓑ 10	10V		
C107, 207	1-102-971-11	Ⓐ 82p		ceramic	
C108, 208	1-161-042-11	Ⓐ 0.0018		ceramic (semiconductor)	
C109, 209	1-161-039-11	Ⓐ 0.001		ceramic (semiconductor)	
C110, 210	1-108-569-12	Ⓐ 0.0038		mylar	
C111, 211	1-108-230-12	Ⓐ 0.0022		mylar	
C112, 212	1-131-392-11	Ⓑ 33	3.15V		
C113, 213	1-131-377-11	Ⓑ 10	10V		
C114–117 C214–217	1-131-408-11	Ⓑ 1	35V		
C118, 218 C119, 219	1-102-973-11	Ⓐ 100p		ceramic	
C301–303	1-121-414-11	Ⓐ 100	10V	elect	
C304	1-121-979-11	Ⓐ 47	6.3V	elect	
C305	1-131-392-11	Ⓑ 33	3.15V		
C306	1-131-414-11	Ⓑ 2.2	20V		
C307	1-102-074-11	Ⓐ 0.001		ceramic	
C308	1-131-392-11	Ⓑ 33	3.15V		
C401, 501	1-102-112-11	Ⓐ 330p		ceramic	
C402, 502	1-131-420-11	Ⓑ 4.7	10V		
C403, 503	1-131-377-11	Ⓑ 10	10V		
C404, 504	1-101-888-11	Ⓐ 68p		ceramic	
C405, 505	1-102-074-11	Ⓐ 0.001		ceramic	
C406, 506	1-131-420-11	Ⓑ 4.7	10V		
C407, 507	1-108-589-12	Ⓐ 0.027		mylar	
C408, 508	1-131-420-11	Ⓑ 4.7	10V		
C409, 509	1-108-355-12	Ⓐ 0.0056		mylar	
C410, 510	1-131-414-11	Ⓑ 2.2	20V		
C411, 511	1-102-074-11	Ⓐ 0.001		ceramic	
C412, 512	1-131-393-11	Ⓑ 47	3.15V		
C413, 513	1-101-888-11	Ⓐ 68p		ceramic	
C414, 514	1-131-387-11	Ⓑ 47	6.3V		
C415, 515	1-108-232-12	Ⓐ 0.0033		mylar	
C416, 516	1-131-377-11	Ⓑ 10	10V		
C417, 517	1-108-581-12	Ⓐ 0.012		mylar	
C418, 518	1-108-579-12	Ⓐ 0.01		mylar	
C419, 519	1-108-361-12	Ⓐ 0.056		mylar	
C420, 520	1-108-355-12	Ⓐ 0.0056		mylar	
C421, 521	1-102-953-11	Ⓐ 18p		ceramic	
C422, 522	1-131-377-11	Ⓑ 10	10V		
C423, 523	1-108-232-12	Ⓐ 0.0033		mylar	
C424, 524	1-131-414-11	Ⓑ 2.2	20V		
C425, 525	1-108-234-12	Ⓐ 0.0047		mylar	
C426, 526	1-131-417-11	Ⓑ 3.3	16V		
C427, 527	1-131-377-11	Ⓑ 10	10V		
C428, 528	1-102-074-11	Ⓐ 0.001		ceramic	
C429, 529 C430, 530	1-131-420-11	Ⓑ 4.7	10V		
C431, 531	1-102-937-11	Ⓐ 4p		ceramic	
C432, 532	1-102-074-11	Ⓐ 0.001		ceramic	
C433, 533	1-131-395-11	Ⓑ 100	3.15V		
C434, 534	1-131-420-11	Ⓑ 4.7	10V		
C435, 535	1-131-341-11	Ⓑ 0.1	35V		
C436, 536	1-131-346-11	Ⓑ 0.68	35V		
C437, 537	1-102-115-11	Ⓐ 560p		ceramic	
C438, 538	1-107-169-11	Ⓐ 100p	500V	silvered mica	
C439, 539	1-108-581-12	Ⓐ 0.012		mylar	
C440, 540	1-108-579-12	Ⓐ 0.01		mylar	
C441, 541 C442, 542	1-108-360-12	Ⓐ 0.039		mylar	
C443, 543	1-131-345-11	Ⓑ 0.47	35V		
C444, 544	1-131-393-11	Ⓑ 47	3.15V		
C445, 545	1-107-042-11	Ⓐ 2.2p	500V	silvered mica	
C446, 546	1-107-253-11	Ⓑ 15+18+22+27p	500V	silvered mica	
C601	1-121-651-11	Ⓐ 10	16V	elect	
C602–605	1-131-420-11	Ⓑ 4.7	10V		
C606, 607	1-108-373-12	Ⓐ 0.0047	100V	mylar	
C608	1-108-579-12	Ⓐ 0.01		mylar	

• Circled letters (Ⓐ to Ⓩ) are applicable to European models only.

Ref. No.	Part No.	Description			
C609	1-129-708-11	Ⓐ 0.0033	630V	film	
C610	1-131-414-11	Ⓑ 2.2	20V		
C611, 612	1-121-419-11	Ⓐ 220	6.3V	elect	
C613	1-121-940-11	Ⓑ 470	16V	elect	
C701	1-161-013-11	Ⓐ 0.01		ceramic (semiconductor)	
C702	1-131-377-11	Ⓑ 10	10V		
C703	1-102-115-11	Ⓐ 560p		ceramic	
C704	1-131-341-11	Ⓑ 0.1	35V		
C705	1-131-380-11	Ⓑ 33	10V		
C706	1-131-414-11	Ⓑ 2.2	20V		
C707	1-161-045-11	Ⓐ 0.0033		ceramic (semiconductor)	
C708	1-131-414-11	Ⓑ 2.2	20V		
C709	1-131-395-11	Ⓑ 100	3.15V		
C710	1-161-045-11	Ⓐ 0.0033		ceramic (semiconductor)	
C711	1-130-140-11	Ⓑ 0.039	100V	film	
C712	1-102-112-11	Ⓐ 330p		ceramic	
C713	1-131-211-11	Ⓑ 0.22	35V		
C714–716	1-161-045-11	Ⓐ 0.0033		ceramic (semiconductor)	
C717	1-131-380-11	Ⓑ 33	10V		
C718	1-131-374-11	Ⓑ 33	16V		
C801	1-102-074-11	Ⓐ 0.001		ceramic	
C802	1-131-377-11	Ⓑ 10	10V		
C803	1-131-408-11	Ⓑ 1	35V		
C804	1-131-345-11	Ⓑ 0.47	35V		
C805	1-131-380-11	Ⓑ 33	10V		
C807, 808	1-161-019-11	Ⓐ 0.033		ceramic (semiconductor)	
C809	1-161-045-11	Ⓐ 0.0033		ceramic (semiconductor)	
C901	1-102-074-11	Ⓐ 0.001		ceramic	

RESISTORS

All resistors are in ohms. Common ¼W carbon resistors are omitted. Refer to the list on page 32 for their resistance values. (kΩ : 1000Ω, MΩ : 1000kΩ)

Ref. No.	Part No.	Description			
R703, 704	1-209-781-11	Ⓐ 10k	1/16W	carbon	
R705	1-210-840-11	Ⓐ 220k	1/16W	carbon	
R707	1-210-384-11	Ⓐ 47k	1/16W	carbon	
R708	1-204-122-11	Ⓐ 1k	1/16W	micro	
R709	1-210-844-11	Ⓐ 470k	1/16W	carbon	
R713	1-214-169-11	Ⓐ 36k	¼W	metal oxide	
R801	1-204-122-11	Ⓐ 1k	1/16W	carbon	
R802	1-210-355-11	Ⓐ 100	1/16W	carbon	
R806	1-204-122-11	Ⓐ 1k	1/16W	carbon	
R807	1-209-777-11	Ⓐ 6.8k	1/16W	carbon	
R808	1-209-770-11	Ⓐ 2.7k	1/16W	carbon	
R809	1-209-771-11	Ⓐ 3.9k	1/16W	carbon	
R810	1-210-840-11	Ⓐ 220k	1/16W	carbon	
R811	1-210-388-11	Ⓐ 68k	1/16W	carbon	
R812	1-204-122-11	Ⓐ 1k	1/16W	carbon	
RV101,201	1-224-252-XX	Ⓑ 10k-B, adjustable; METER LEVEL			
RV301	1-224-254-XX	Ⓑ 47k-B, adjustable; BATTERY INDICATION			
RV401,501	1-224-252-XX	Ⓑ 10k-B, adjustable; PB LEVEL			
RV402,502	1-224-252-XX	Ⓑ 10k-B, adjustable; REC LEVEL			
RV701	1-226-274-00	Ⓒ 20k-B, adjustable; TAPE SPEED			
RV901	1-226-273-00	Ⓔ 20k-A, variable; REC LEVEL			
RV902	1-226-272-00	Ⓓ 20k-B, variable; MONITOR LEVEL			

SWITCHES

Ref. No.	Part No.	Description
S301	1-516-846-00	Ⓑ Slide, MIC ATT
S601	1-514-254-00	Ⓒ Slide, REC/PB
S901	1-514-346-00	Ⓑ Leaf, BATTERY CHECK/LIGHT
S902	1-552-478-00	Ⓒ Miniature, CrO_2
S903–905	1-552-477-00	Ⓒ Lever-slide; TAPE SELECT, DOLBY NR, LIMITER
S906–908	1-514-346-00	Ⓑ Leaf, POWER, FWD, rec·pb/mute

Note: Circled leters (Ⓐ to Ⓩ) are applicable to European models only.

Ref. No.	*Part No.*	*Description*
		JACKS
CNJ901	1-507-593-00	Ⓑ LINE IN, LINE OUT
CNJ902	1-507-447-XX	Ⓑ DC IN
J901, 902	1-507-421-00	Ⓒ MICROPHONE
J903	1-507-477-XX	Ⓓ HEADPHONES
		MISCELLANEOUS
CP601	1-464-081-00	Ⓛ DC-DC Converter
HE901	8-825-692-10	Ⓔ Head, erase; EF168-36A
HRP901	8-825-584-00	Ⓜ Head, record/playback; PF145-3602A
M901	X-3556-235-1	Ⓣ Motor Ass'y
ME901	1-520-350-00	Ⓗ Meter, level (LEFT)
ME902	1-520-351-00	Ⓗ Meter, level (RIGHT)
PL901	1-518-134-XX	Ⓑ Lamp 100mA/2V
SP901	1-502-582-00	Ⓖ Speaker
	1-452-130-00	Ⓑ Magnet

ACCESSORIES & PACKING MATERIALS

Part No.	*Description*
X-3556-236-0	Ⓖ Belt Ass'y, carrying
X-3701-105-0	Ⓐ Tip Ass'y, head cleaning
1-528-022-00	Ⓑ Battery, size "D" (Canadian model)
1-534-049-31	Ⓔ Cord, connection; RK-74H
3-557-850-00	Ⓑ Cushion
3-557-852-00	Ⓓ Carton
3-701-625-00	Ⓐ Bag, plastic
3-701-631-00	Ⓐ Bag, plastic
3-770-516-11	Ⓔ Manual, instruction
3-793-828-11	Ⓐ Card, caution
3-793-956-31	Ⓑ Card, warranty (Canadian model)

1/4 WATT CARBON RESISTORS Ⓐ

Note: Circled letter Ⓐ is applicable to European models only.

Ω	*Part No.*	Ω	*Part No.*	Ω	*Part No.*	Ω	*Part No.*	Ω	*Part No.*	Ω	*Part No.*	Ω	*Part No.*
1.0	1-244-601-11	10	1-244-625-11	100	1-244-649-11	1.0k	1-244-673-11	10 k	1-244-697-11	100k	1-244-721-11	1.0M	1-244-745-11
1.1	1-244-602-11	11	1-244-626-11	110	1-244-650-11	1.1k	1-244-674-11	11 k	1-244-698-11	110k	1-244-722-11	1.1M	1-244-746-11
1.2	1-244-603-11	12	1-244-627-11	120	1-244-651-11	1.2k	1-244-675-11	12 k	1-244-699-11	120k	1-244-723-11	1.2M	1-244-747-11
1.3	1-244-604-11	13	1-244-628-11	130	1-244-652-11	1.3k	1-244-676-11	13 k	1-244-700-11	130k	1-244-724-11	1.3M	1-244-748-11
1.5	1-244-605-11	15	1-244-629-11	150	1-244-653-11	1.5k	1-244-677-11	15 k	1-244-701-11	150k	1-244-725-11	1.5M	1-244-749-11
1.6	1-244-606-11	16	1-244-630-11	160	1-244-654-11	1.6k	1-244-678-11	16 k	1-244-702-11	160k	1-244-726-11	1.6M	1-244-750-11
1.8	1-244-607-11	18	1-244-631-11	180	1-244-655-11	1.8k	1-244-679-11	18 k	1-244-703-11	180k	1-244-737-11	1.8M	1-244-751-11
2.0	1-244-608-11	20	1-244-632-11	200	1-244-656-11	2.0k	1-244-680-11	20 k	1-244-704-11	200k	1-244-728-11	2.0M	1-244-752-11
2.2	1-244-609-11	22	1-244-633-11	220	1-244-657-11	2.2k	1-244-681-11	22 k	1-244-705-11	220k	1-244-729-11	2.2M	1-244-753-11
2.4	1-244-610-11	24	1-244-634-11	240	1-244-658-11	2.4k	1-244-682-11	24 k	1-244-706-11	240k	1-244-730-11	2.4M	1-244-754-11
2.7	1-244-611-11	27	1-244-635-11	270	1-244-659-11	2.7k	1-244-683-11	27 k	1-244-707-11	270k	1-244-731-11	2.7M	1-244-755-11
3.0	1-244-612-11	30	1-244-636-11	300	1-244-660-11	3.0k	1-244-684-11	30 k	1-244-708-11	300k	1-244-732-11	3.0M	1-244-756-11
3.3	1-244-613-11	33	1-244-637-11	330	1-244-661-11	3.3k	1-244-685-11	33 k	1-244-709-11	330k	1-244-733-11	3.3M	1-244-757-11
3.6	1-244-614-11	36	1-244-638-11	360	1-244-662-11	3.6k	1-244-686-11	36 k	1-244-710-11	360k	1-244-734-11	3.6M	1-244-758-11
3.9	1-244-615-11	39	1-244-639-11	390	1-244-663-11	3.9k	1-244-687-11	39 k	1-244-711-11	390k	1-244-735-11	3.9M	1-244-759-11
4.3	1-244-616-11	43	1-244-640-11	430	1-244-664-11	4.3k	1-244-688-11	43 k	1-244-712-11	430k	1-244-736-11	4.3M	1-244-760-11
4.7	1-244-617-11	47	1-244-641-11	470	1-244-665-11	4.7k	1-244-689-11	47 k	1-244-713-11	470k	1-244-737-11	4.7M	1-244-761-11
5.1	1-244-618-11	51	1-244-642-11	510	1-244-666-11	5.1k	1-244-690-11	51 k	1-244-714-11	510k	1-244-738-11	5.1M	1-244-762-11
5.6	1-244-619-11	56	1-244-643-11	560	1-244-667-11	5.6k	1-244-691-11	56 k	1-244-715-11	560k	1-244-739-11		
6.2	1-244-620-11	62	1-244-644 11	620	1-244-668-11	6.2k	1-244-692-11	62 k	1-244-716-11	620k	1-244-740-11		
6.8	1-244-621-11	68	1-244-645-11	680	1-244-669-11	6.8k	1-244-693-11	68 k	1-244-717-11	680k	1-244-741-11		
7.5	1-244-622-11	75	1-244-646-11	750	1-244-670-11	7.5k	1-244-694-11	75 k	1-244-718-11	750k	1-244-742-11		
8.2	1-244-623-11	82	1-244-647-11	820	1-244-671-11	8.2k	1-244-695-11	82 k	1-244-719-11	820k	1-244-743-11		
9.1	1-244-624-11	91	1-244-648-11	910	1-244-672-11	9.1k	1-244-696-11	91 k	1-244-720-11	910k	1-244-744-11		

HARDWARE NOMENCLATURE

Screw: – P 3 x 10

- *L: Length in mm*
- *D: Diameter in mm*
- *Type of head*
- *Indicated slotted-head only. Unless otherwise indicated, it means cross-recessed head (Phillips type).*

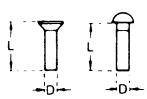

Nut, Washer, Retaining ring: N 3

- *Diameter of usable screw or shaft*
- *Reference designation*

Reference Designation	Shape	Description	Remarks
		SCREWS	
P		pan-head screw	binding-head (B) screw for replacement
PWH		pan-head screw with washer face	binding-head (B) screw and flat washer for replacement
PS PSP		pan-head screw with spring washer	binding-head (B) screw and spring washer for replacement
PSW PSPW		pan-head screw with spring and flat washers	binding-head (B) screw and spring and flat washers for replacement
R		round-head screw	binding-head (B) screw for replacement
K		flat-countersunk-head screw	
RK		oval-countersunk-head screw	
B		binding-head screw	
T		truss-head screw	binding-head (B) screw for replacement
F		flat-fillister-head screw	
RF		fillister-head screw	
BV		braizer-head screw	

Reference Designation	Shape	Description	Remarks
		SELF-TAPPING SCREWS	
TA		self-tapping screw	ex: TA, P 3 x 10
PTP		pan-head self-tapping screw	binding-head self-tapping (TA, B) screw for replacement
PTPWH		pan-head self-tapping screw with washer face	binding-head self tapping (TA, B) screw and flat washer for replacement
PTTWH		pan-head thread-rolling screw with washer face	binding-head (B) screw and flat washer for replacement
		SET SCREWS	
SC		set screw	
SC		hexagon-socket set screw	ex: SC 2.6 x 4, hexagon socket
		NUT	
N		nut	
		WASHERS	
W		flat washer	
SW		spring washer	
LW		internal-tooth lock washer	ex: LW3, internal
LW		external-tooth lock washer	ex: LW3, external
		RETAINING RINGS	
E		retaining ring	
G		grip-type retaining ring	